Selection table for non-contact safety system CMS-E-BR/CMS-E-ER/CMS-E-FR

Evaluation units	Connection	Design	Read head contact assembly	Assured switch-on distance S_{ao} [mm]	Assured switch-on distance S_{ar} [mm]	Number of outputs Read heads		Category according to EN 954-1	Read head	Actuator
CMS-E-BR 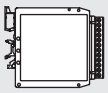 Page 26 - 29 and CMS-E-BR CMS-E-BR  Page 26 - 29	Hard-wired encapsulated connection cable on the read head	Design A 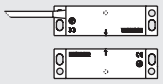 Page 34		6	31	CMS-E-BR	1 ... 4	3	CMS-R-AXH...	CMS-M-AC
						CMS-E-ER/CMS-E-FR	1	4		
							2 ... 30	3		
		Design B 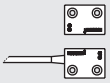 Page 36		3	12	CMS-E-BR	1 ... 4	3	CMS-R-BXI...	CMS-M-BD
						CMS-E-ER/CMS-E-FR	1	4		
							2 ... 30	3		
		Design C M25 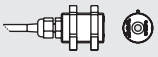 Page 38		6	14	CMS-E-BR	1 ... 4	3	CMS-R-CXC...	CMS-M-CA
						CMS-E-ER/CMS-E-FR	1	4		
							2 ... 30	3		
		Design E M30  Page 40		6	17	CMS-E-BR	1 ... 4	3	CMS-R-EXM...	CMS-M-EF
						CMS-E-ER/CMS-E-FR	1	4		
							2 ... 30	3		

Evaluation unit CMS-E-BR

- **4 read heads can be connected (category 3 according to EN 954-1)**
- **1 safety contact**
- **1 auxiliary contact**
- **1 feedback loop can be connected**

Functional description
The evaluation unit CMS-E-BR is used to monitor up to 4 safety guards in category 3 according to EN 954-1.

Read heads
The evaluation unit CMS-E-BR is suitable for the direct connection of up to 4 read heads.

Category according to EN 954-1
- Category 3 with up to 4 read heads connected

Note:
At low approach speeds in the z direction, the time between the switching the reed contacts must not be more than 150 ms.

Evaluation unit CMS-E-BR — Cat. 3

Dimension drawing

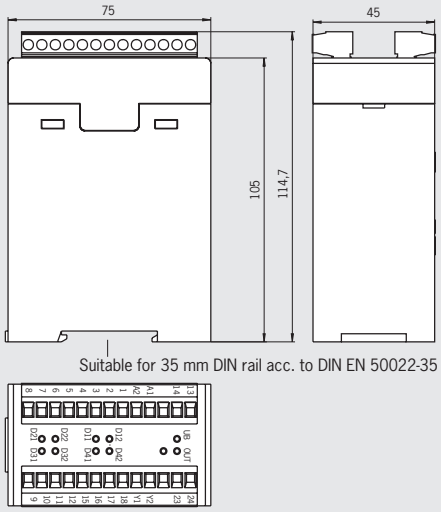

Block diagram

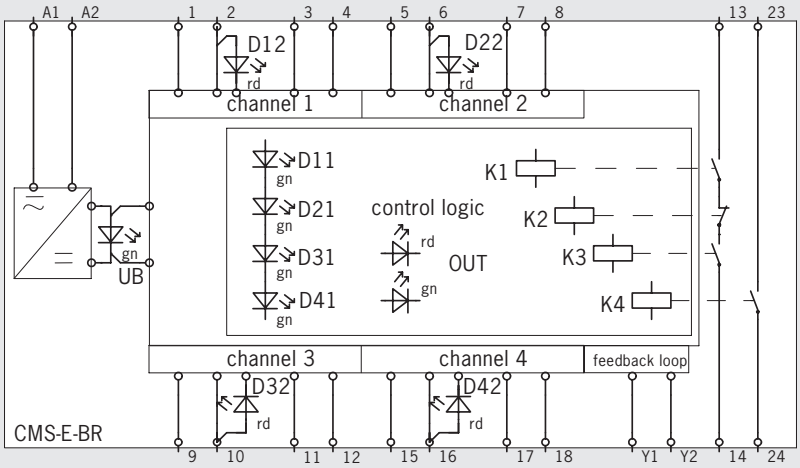

LED displays

Actuator \ LED	U_B Operating voltage green	Dx1 green	Dx2 red	OUT green	OUT red
in the operating distance [1]	●	●		●	
not in the operating distance [2]	●		●		●
not completely in the operating distance	●	●	●		●

1) NC contact in the read head is open, NO contact in the read head is closed.
All NO contacts in the previous channels are closed.
2) NC contact in the read head is open, NO contact in the read head is closed.

Ordering table

Designation	Scope of delivery	Order No. / Item
CMS-E-BR	Evaluation unit Four 2-pole jumpers	**085 537** CMS-E-BR

Technical data evaluation unit CMS-E-BR

Parameter	Value min.	Value typ.	Value max.	Unit
Housing material		Polyamide PA6.6		
Dimensions		114.7 x 75 x 45		mm
Weight		0.24		kg
Ambient temperature	0	-	+50	°C
Storage temperature	-25	-	+70	°C
Degree of protection according to EN 60529		Terminals IP 20 / housing IP 40		
Degree of contamination		2		
Installation		DIN rail 35 mm according to EN 50022-35		
Number of read heads		1 ... 4		
Connection type		Plug-in connection terminals		
Operating voltage U_B		24 ±10% [1]		V AC/DC
Internal fuse (operating voltage) (automatically resetting fuse PTC)		0.5		A
Switching voltage U	-	-	250	V AC
Current consumption	-	250		mA
Switching current I at 24 V	-	-	3	A
Switching current I at 24 V	13	-		mA
Breaking capacity P	-	-	750	VA
External contact fuse (safety circuit)		3 A gG		
Safety contact		1		
Auxiliary contact		1		
Utilization category to EN 60947-5-1		I_e [2]	U_e [2]	
	AC-1	3 A	250 V	
	AC-1	3 A	24 V	
	AC-15	1 A	250 V	
	AC-15	1 A	24 V	
	DC-13	3 A	24 V	
Switching load acc. to UL Class 2		Input: 24 V AC/DC Output: 30 V AC / 24 V DC		
Category according to EN 954-1		3		
Classification according to EN 60947-5-3		PDF-S		
Rated insulation voltage U_i		250		V
Vibration resistance		According to EN 60947-2-5		
Mechanical operating cycles relays		30×10^6		
EMC compliance		According to EN 60947-5-3		

1) All the electrical connections must either be isolated from the mains supply by a safety transformer according to EN 61558-2-6 with limited output voltage in the event of a fault, or by other equivalent isolation measures.
2) I_e = switching current max. per contact, U_e = switching voltage

Evaluation unit CMS-E-ER

- **Up to 30 read heads can be connected**
- **Up to category 4 according to EN 954-1**
- **2 safety contacts**
- **1 auxiliary contact**
- **1 feedback loop can be connected**
- **Start automatic/monitored/not monitored**

Functional description
The evaluation unit CMS-E-ER is used to monitor numerous safety guards in category 3 or 4 according to EN 954-1.

Read heads
The evaluation unit CMS-E-ER is suitable for the direct connection of up to 30 read heads.

Category according to EN 954-1
- Category 3 with more than one read head connected
- Category 4 with only one read head connected

LED displays

LED / Actuator	U_B Operating voltage green	K1 Channel 1 green	K2 Channel 2 green
in the operating distance	●	●	●
not in the operating distance	●		
not completely in the operating distance	●	● or ●	

Evaluation unit CMS-E-ER | Cat. 3 | Cat. 4

Dimension drawing

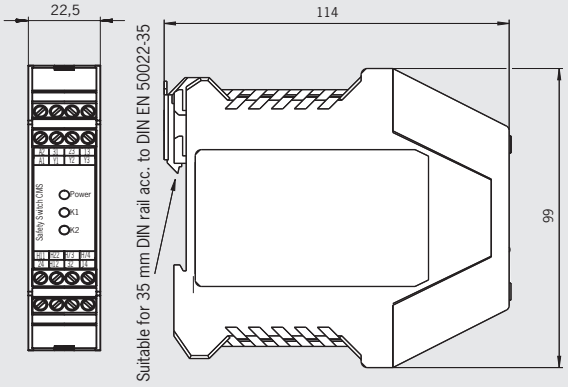

Block diagram

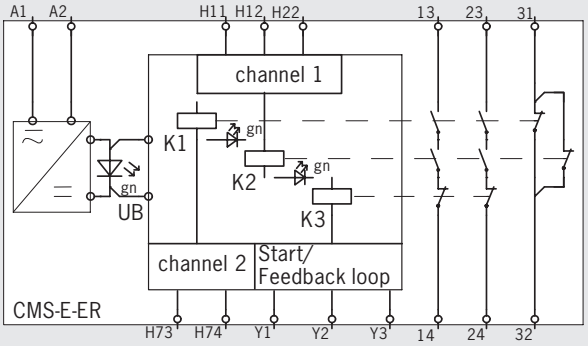

Note:
At low approach speeds in the z direction, the time between the switching the reed contacts must not be more than 0.6 ms.

Ordering table

Designation	Scope of delivery	Order No. / Item
Evaluation unit CMS-E-ER	Evaluation unit One 2-pole jumper	**099 182** CMS-E-ER

Technical data evaluation unit CMS-E-ER

Parameter	Value min.	Value typ.	Value max.	Unit
Housing material	Polyamide PA6.6			
Dimensions	114 x 99 x 22.5			mm
Weight	0.3			kg
Ambient temperature	0	-	+55	°C
Storage temperature	-25	-	+70	°C
Degree of protection according to EN 60529	Terminals IP 20 / housing IP 40			
Degree of contamination	2			
Installation	DIN rail 35 mm according to EN 50022-35			
Number of read heads	1 ... 30			
Connection type	Connection terminals			
Operating voltage U_B	24 ±10% [1]			V AC/DC
Internal fuse (operating voltage) (automatically resetting fuse PTC)	750			mA
Safety contacts	2 NO contacts			
Switching voltage U	-	-	240	V AC
Current consumption at DC 24 V	10	-	120	mA
Switching current I at 24 V	-	-	3	A
Switching current I at 24 V	10	-	-	mA
Breaking capacity P	-	-	720	VA
External contact fuse (safety circuit according to EN IEC 60269-1)	4 A gG			
Auxiliary contact	1 NC contact			
Switching current I at 24 V	-	-	1.5	A
Utilization category to EN 60947-5-1		I_e [2]	U_e [2]	
	AC-1	3 A	230 V	
	AC-1	3 A	24 V	
	AC-15	0.9 A	240 V	
	AC-15	0.9 A	24 V	
	DC-13	1.5 A	24 V	
Switching load acc. to UL Class 2	Input: 24 V AC/DC Output: 30 V AC / 24 V DC			
Category according to EN 954-1	3 [3]	4 [4]		
Classification according to EN 60947-5-3	PDF-S	PDF-M		
Rated insulation voltage U_i	250			V
Vibration resistance	According to EN 60947-5-2			
Mechanical operating cycles relays	10^7			
EMC compliance	According to EN 60947-5-3			

1) All the electrical connections must either be isolated from the mains supply by a safety transformer according to EN 61558-2-6 with limited output voltage in the event of a fault, or by other equivalent isolation measures.
2) I_e = max. switching current max. per contact, U_e = switching voltage
3) Safety category 3 with more than one connected read head
4) Safety category with only one read head connected

Evaluation unit CMS-E-FR

- **Up to 30 read heads can be connected**
- **Up to category 4 according to EN 954-1**
- **2 safety contacts**
- **1 auxiliary contact**
- **6 monitoring outputs**
- **1 feedback loop can be connected**
- **Start automatic/monitored/not monitored**

Functional description
The evaluation unit CMS-E-FR is used to monitor numerous safety guards in category 3 or 4 according to EN 954-1.

Read heads
The evaluation unit CMS-E-FR is suitable for the direct connection of up to 30 read heads.

Category according to EN 954-1
- Category 3 with more than one read head connected
- Category 4 with only one read head connected

Note:
At low approach speeds in the z direction, the time between the switching the reed contacts must not be more than 0.6 ms.

Evaluation unit CMS-E-FR | **Cat. 3** | **Cat. 4**

Dimension drawing

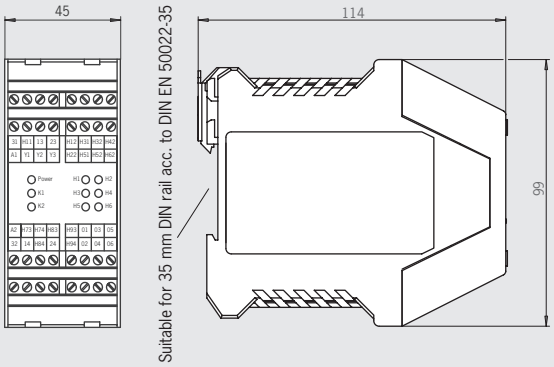

Block diagram

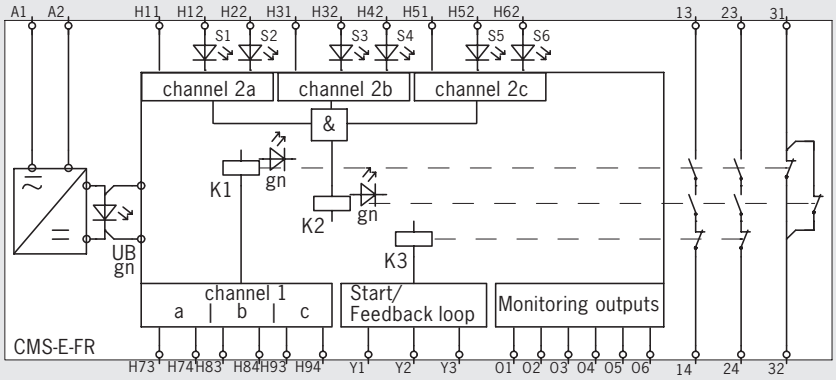

LED displays

LED / Actuator	U_B Operating voltage green	K1 Channel 1 green	K2 Channel 2 green	H1 ... H6 green
in the operating distance	●	●	●	● 1)
none in the operating distance	●			
not completely in the operating distance	●	● or ●		
at least one not in the operating distance	●			● 1)

1) The LED indicator shows which actuators are in the operating distance.

Ordering table

Designation	Scope of delivery	Order No. / Item
Evaluation unit CMS-E-FR	Evaluation unit Two 3-pole jumpers	**099 258** CMS-E-FR

Technical data evaluation unit CMS-E-FR

Parameter	Value min.	Value typ.	Value max.	Unit
Housing material	Polyamide PA6.6			
Dimensions	114 x 99 x 45			mm
Weight	0.3			kg
Ambient temperature	0	-	+55	°C
Storage temperature	-25	-	+70	°C
Degree of protection according to EN 60529	Terminals IP 20 / housing IP 40			
Degree of contamination	2			
Installation	DIN rail 35 mm according to EN 50022-35			
Number of read heads	1 ... 30			
Connection type	Connection terminals			
Operating voltage U_B	24 ±10% [1]			V AC/DC
Internal fuse (operating voltage) (automatically resetting fuse PTC)	750			mA
Safety contacts	2 NO contacts			
Switching voltage U	-	-	240	V AC
Current consumption at DC 24 V	10	-	120	mA
Switching current I at 24 V	-	-	3	A
Switching current I at 24 V	10	-	-	mA
Breaking capacity P	-	-	720	VA
External contact fuse (safety circuit according to EN IEC 60269-1)	4 A gG			
Auxiliary contact	1 NC contact			
Switching current I at 24 V	-	-	1.5	A
Monitoring output O1 ... O6	DC 24 V / 50 mA per contact			
Utilization category to EN 60947-5-1		I_e [2]	U_e [2]	
	AC-1	3 A	230 V	
	AC-1	3 A	24 V	
	AC-15	0.9 A	240 V	
	AC-15	0.9 A	24 V	
	DC-13	1.5 A	24 V	
Switching load acc. to UL Class 2	Input: 24 V AC/DC Output: 30 V AC / 24 V DC			
Category according to EN 954-1	3 [3]	4 [4]		
Classification according to EN 60947-5-3	PDF-S	PDF-M		
Rated insulation voltage U_i	250			V
Vibration resistance	According to EN 60947-5-2			
Mechanical operating cycles relays	10^7			
EMC compliance	According to EN 60947-5-3			

1) All the electrical connections must either be isolated from the mains supply by a safety transformer according to EN 61558-2-6 with limited output voltage in the event of a fault, or by other equivalent isolation measures.
2) I_e = max. switching current max. per contact, U_e = switching voltage
3) Safety category 3 with more than one connected read head
4) Safety category 4 with only one connected read head

Connection examples evaluation unit CMS-E-BR

Connection example 1

- One read head on one evaluation unit CMS-E-BR (without feedback loop)

Cat. 3

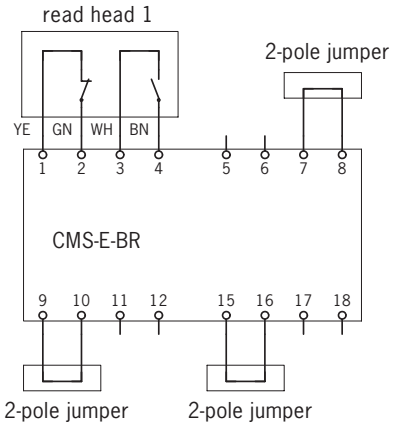

Connection examples for automatic start

- With feedback loop
- Without feedback loop

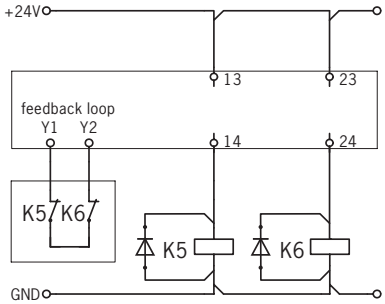

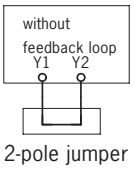

Connection example 2

- Two read heads on one evaluation unit CMS-E-BR (without feedback loop)

Cat. 3

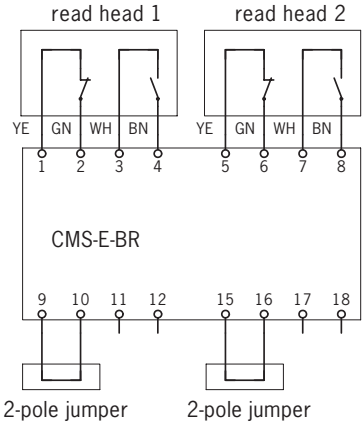

Connection example 3

- Four read heads on one evaluation unit CMS-E-BR (without feedback loop)

Cat. 3

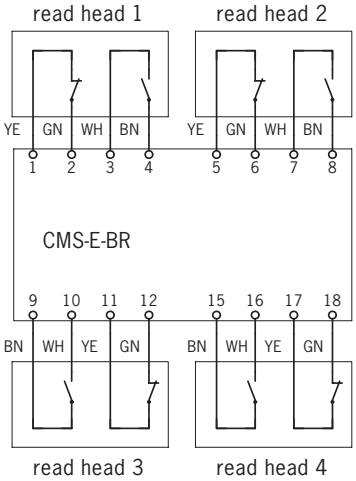

Notes

The following applies to all the illustrations:
Evaluation unit electrically isolated, actuator not in the operating distance.

Connection examples evaluation unit CMS-E-ER

Connection example 1

▸ One read head on one evaluation unit CMS-E-ER

Cat. 4

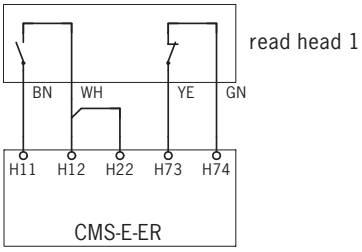

Connection example 2

▸ Two read heads on one evaluation unit CMS-E-ER

Cat. 3

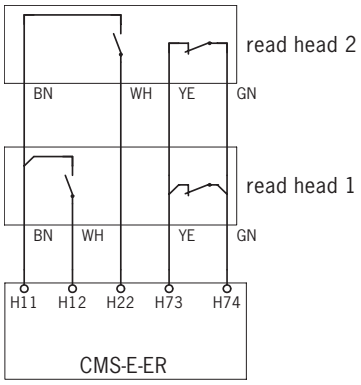

Connection example 3

▸ More than 2 up to 30 read heads on one evaluation unit CMS-E-ER

Cat. 3

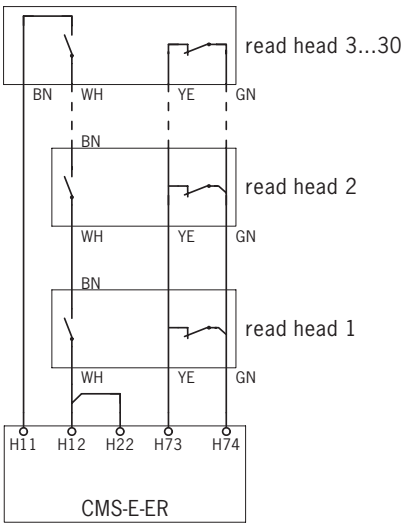

Connection examples for automatic start

▸ With feedback loop

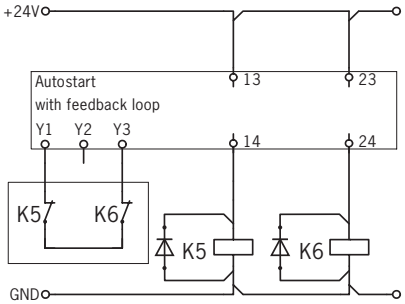

▸ Without feedback loop

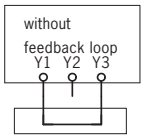

2-pole jumper

Connection examples for monitored start

▸ With feedback loop

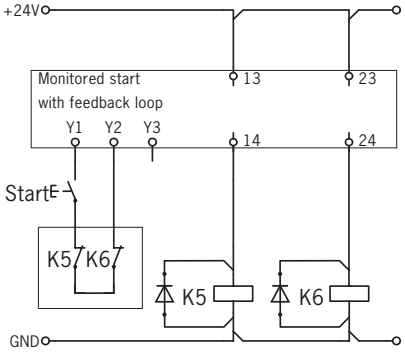

▸ Without feedback loop

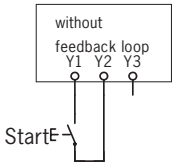

Connection examples for unmonitored start

▸ With feedback loop

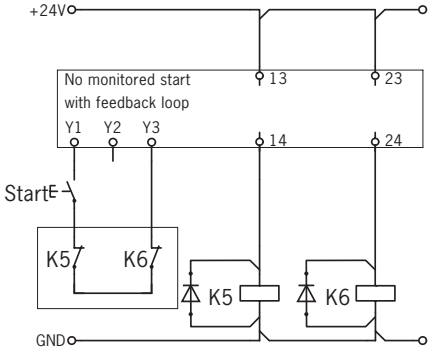

▸ Without feedback loop

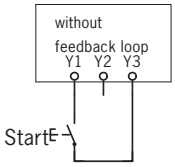

Notes

The following applies to all the illustrations:
Evaluation unit electrically isolated, actuator not in the operating distance.

Connection examples evaluation unit CMS-E-FR

Connection example 1

▸ One read head on one evaluation unit CMS-E-FR

Cat. 4

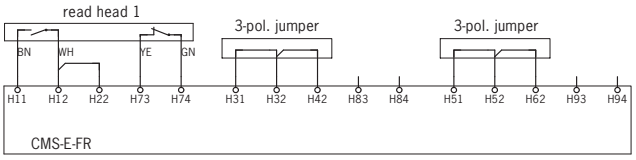

Connection examples for automatic start

▸ With feedback loop

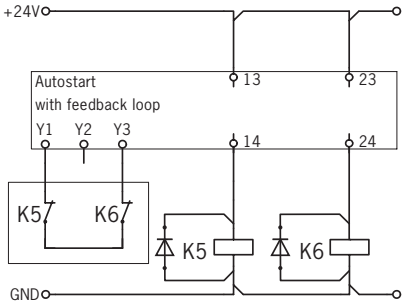

▸ Without feedback loop

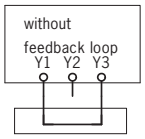

2-pole jumper

Connection example 2

▸ Three read heads on one evaluation unit CMS-E-FR

Cat. 3

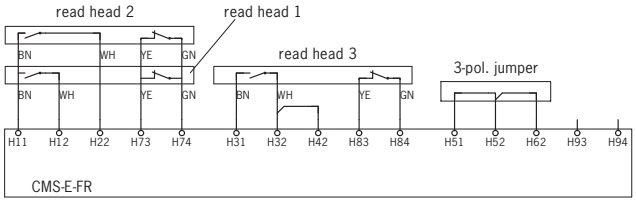

Connection examples for monitored start

▸ With feedback loop

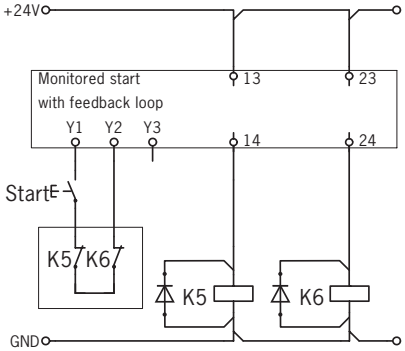

▸ Without feedback loop

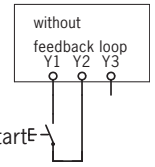

Connection example 3

▸ Six read heads on one evaluation unit CMS-E-FR

Cat. 3

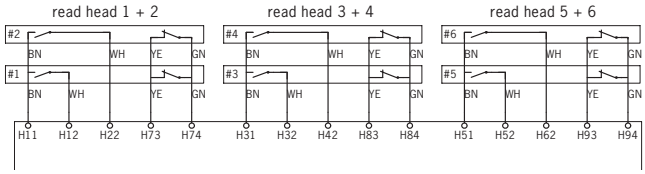

Connection examples for unmonitored start

▸ With feedback loop

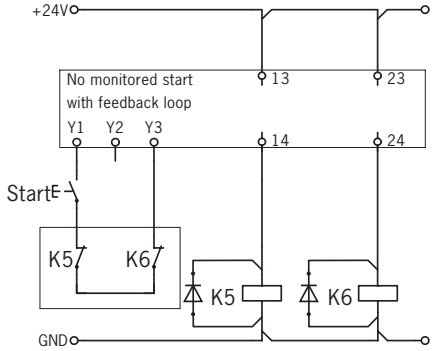

▸ Without feedback loop