Safety Relays

ESM/ESM-F

More than safety.

EUCHNER

More than safety.

Emil Euchner, the company's founder and inventor of the multiple limit switch, circa 1928.

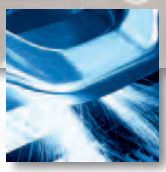

Around the world – the Swabian specialists in motion sequence control for mechanical and systems engineering.

EUCHNER's history began in 1940 with the establishment of an engineering office by Emil Euchner. Since that time, EUCHNER has been involved in the design and development of switchgear for controlling a wide variety of motion sequences in mechanical and systems engineering. In 1953, Emil Euchner founded EUCHNER + Co., a milestone in the company's history. In 1952, he developed the first multiple limit switch – to this day a symbol of the enterprising spirit of this family-owned company.

Automation – Safety – ManMachine

Today, our products range from electromechanical and electronic components to complex system solutions. With this wide range of products we can provide the necessary technologies to offer the right solution for special requirements – regardless of whether these relate to reliable and precise positioning or to components and systems for safety engineering in the automation sector.
EUCHNER products are sold through a world-wide sales network of competent partners. With our closeness to the customer and the guarantee of reliable solutions throughout the globe, we enjoy the confidence of customers all over the world.

Quality, reliability, precision

Quality, reliability and precision are the hallmarks of our corporate philosophy. They represent concepts and values to which we feel totally committed.
At EUCHNER, quality means that all our employees take personal responsibility for the company as a whole and, in particular, for their own field of work. This individual commitment to perfection results in products which are ideally tailored to the customers' needs and the requirements of the market. After all: our customers and their needs are the focus of all our efforts. Through efficient and effective use of resources, the promotion of personal initiative and courage in finding unusual solutions to the benefit of our customers, we ensure a high level of customer satisfaction. We familiarize ourselves with their needs, requirements and products and we learn from the experiences of our customers' own customers.

EUCHNER – More than safety.

Quality – made by EUCHNER

Contents

Safety Relays ESM/ESM-F

General information 4

The ESM modular principle 4

The modular safety system ESM-F 4
Plug-in and use! - The advantages of the modular system 4
Quick troubleshooting 4
Automatic or manual start 4
Contacts for higher currents and feedback loop 5
Setting up safety groups 5
Adding time-delayed outputs 5
Approvals 6

Explanation of symbols 6

Safety relays ESM 7
Safety relays ESM-BL.. and ESM-BA.. 8
Safety relay time-delayed ESM-BT.. 10
Safety relay 2-hand ESM-2H.. 11
Contact expansion ESM-ES.. 12
Contact expansion time-delayed ESM-TE.. 13

Modular safety system ESM-F 15
Base units ESM-F-B.. 16
Input modules ESM-F-I.. 17
Output modules ESM-F-O.. 18
Time-delayed output modules ESM-F-OT.. 19
Accessories 20

Technical data 21
Safety relays ESM 22
Modular safety system ESM-F 26

Appendix
Glossary 29
Connection examples ESM 29
Connection examples ESM-F 32

Item Index
Index by item designation 33
Index by order numbers 33

Product overview 37

General information

For machines and systems that can produce a risk for people when in operation, the EU Machinery directive defines minimum requirements that are intended to reduce to a minimum the specific hazards and the related risks of accident.
If all sources of danger cannot be eliminated by design measures, appropriate protective measures must be taken. Using safety guards, such as fences or similar, it is intended to prevent people entering the danger area. If users need to have access to the danger area during operation, movable safety guards such as protective doors, flaps, etc, are used. This is the case, for example, for loading or unloading, troubleshooting, machine setup or cleaning work.
To safeguard this access area, safety switches with various principles of operation are used. These switches are designed to monitor the position of the safety guard and, when the safety guard is opened, to generate a signal which will safely interrupt the supply of power to the potentially hazardous parts of the system or which will ensure that the safety circuits are safely interrupted. The EUCHNER safety relays series ESM or ESM-F ensure that the safety circuits are interrupted. On the one hand they safely evaluate components connected such as

- mechanical safety switches with and without guard locking,
- non-contact safety switches,
- emergency stop switchgear,
- electro-sensitive protective equipment, etc.

while on the other hand they safely shut down potentially hazardous machine functions.

The safety relays impress with their compact DIN rail housing and their suitability for applications up to safety category 4 in accordance with EN 954-1.

The ESM modular principle

All units in the ESM safety relay series are fitted in a housing that is only 22.5 mm wide. Various safety relays are available to which contact expansions can be added on the output side. The contact expansions can be non-time-delay or time-delayed. The advantage of this modular principle is that only a few devices are required to be able to realize a large number of different safety evaluations.
The relays can be operated with various types of starting. The devices can be started manually or automatically using suitable wiring. The manual start can also monitor the start button.
Using suitable wiring it is also possible to integrate a feedback circuit such that safety-related parts of a machine or system downstream can also be monitored.
In the ESM series the majority of the devices are available with a variety of input voltage ranges.

The modular safety system ESM-F

Plug-in and use! - The advantages of the modular system

Connecting several units in series using the ESM-F system does not involve any wiring effort. The units are connected together using a special connector system and are ready for use immediately. Programming is not necessary.

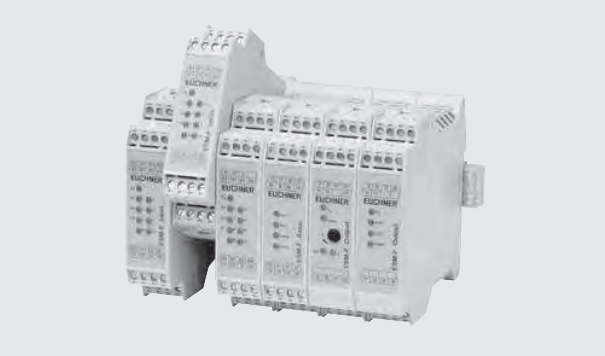

To be able to work with the system, it is first necessary to connect a base unit. The input modules are positioned to the left of the base unit and the output modules to the right. In this way it is easy to expand the system.
By simply connecting together the units, it is possible to implement any combination of non-time-delay and time-delay safety contacts. The number of expansion units is almost unlimited.
The uniform and space-saving design of all the devices in the entire series also makes possible installation in compact control cabinets.

Quick troubleshooting

Every ESM-F unit is equipped with LEDs that indicate the device status and the state of the inputs and outputs.
The safety devices are connected using plug-in connection terminals that can be rapidly disconnected from the device. A faulty unit can be replaced quickly. The faulty unit is simply removed and replaced with a new unit - that's it! Function is restored immediately.

Automatic or manual start

The base unit can be started either manually using a start button or automatically.

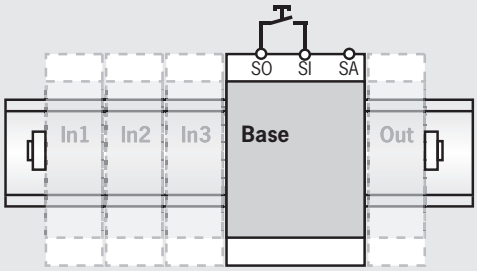

Monitored, manual start

Subject to technical modifications; no responsibility is accepted for the accuracy of this information.

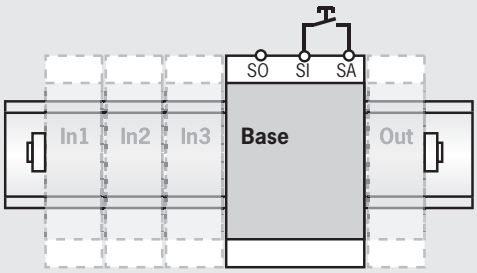

Un-monitored, manual start

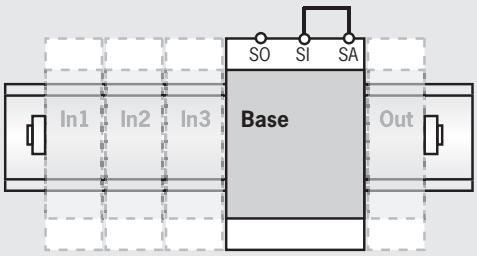

Automatic start

Contacts for higher currents and feedback loop

To be able to use contacts that are suitable for higher currents, the safety contacts on the device can be extended using external contactors with positively driven contacts.
The coils on the contactors are operated using the safety contacts on the base unit or on an output module and the monitoring contacts on the contactor are monitored by the feedback loop inputs on the ESM-F unit.

Setting up safety groups

Safety groups can be formed using the ESM-F system. In this way it is possible to shutdown only that part of the system in which maintenance or setup work is to be performed. All remaining parts of the system continue to function.
A dedicated base unit is used for each group. In this way each group can be evaluated separately. By simply connecting the groups of units in a specific manner, it can be achieved that certain safety components only act on one base unit, while other safety components, e. g. emergency stop buttons, are transferred to the entire system.
The logical allocation is realized using a twin cable. Here the group outputs (GO1 and GO2) on a higher level base unit or input module are fed to the group inputs (GI1 and GI2) on a base unit in a different group. The signal GO on the input module drops out as soon as a safety path is interrupted on either this **or** any other input module to its left.
The higher-level input module then acts on this group. The example given shows the correct allocation of the units and the connection of the connection cable:
The function of the outputs GO1 and GO2 on the base unit is similar. However, here the signal GO is only affected by the inputs S12 and S14. The following application examples show the difference.

- Forming a group with the outputs GO1 and GO2 on an input module

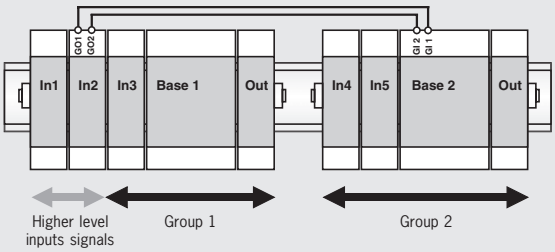

Formation of a group with input modules and base units

The input modules In1 and In2 shut down the output modules in both groups, input module In3 only acts on group 1. The units In4 and In5 only on group 2. The connection cable is connected between the GO terminals on the last input module on the right (here: In2) that is to act on all groups, and the GI terminals on the base unit in group 2 (basic 2). Using the ESM-F system it is also possible to form more than two groups. A wide range of combinations of input modules can be allocated to each group.

- Forming a group with the outputs GO1 and GO2 on a base unit

It is also possible, e.g., to connect daisy-chained emergency stops to a base unit and for only this chain to act on other base units. The following example shows such an application. Only the inputs S12 and S14 on a base unit act on the outputs GO1 and GO2. In this way it is possible for the emergency stop chain to act on both base units, while the safety inputs S22 and S24 and all input modules in the group only act on base unit 1.

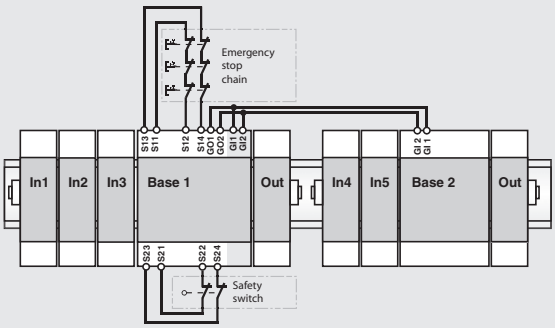

Formation of a group with two base units.
Example connection for daisy-chained emergency stops

Adding time-delayed outputs

Sometimes it is necessary to continue to supply parts of the system with power after an emergency stop request, e. g. to move tools to a safe home position or to brake parts of the system that run on. In this case a turn-off delayed unit is used on the right beside the standard output modules. This additional unit switches off its four safety contacts after the time-delay set on the potentiometer has elapsed (controlled stop, stop category 1 in accordance with EN 60204-1).

A special advantage is the ease with which time-delayed outputs can be added: if more than four time-delay contacts are required, it is possible to fit further standard output module to the right of the turn-off delayed output module; these additional standard output modules are then switched at the same time as the turn-off delayed unit.

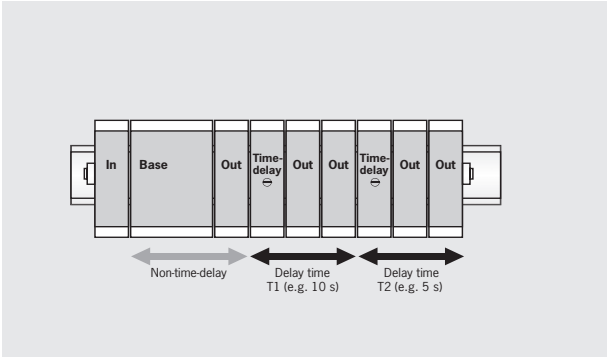

If several different time-delays are required, the system can be expanded with further turn-off delayed output modules. All time-delayed output modules are independent of the time-delayed outputs positioned to the left. In the above example it is also possible for T2 to be less than T1.

Approvals

To demonstrate conformity, the Machinery directive also includes the possibility of type examination. Although all relevant standards are taken into account during development, we have all our switchgear subjected to additional type examinations by a notified body.
Many of the items of switchgear listed in this catalog have been tested by an employers' liability insurance association (BG) and are given in the lists from the BG.
Furthermore, numerous items of switchgear are listed by Underwriters Laboratories (UL). These items of switchgear can be used in countries in which this listing is required. The approval symbols on the individual pages of the catalog indicate which body tested the switchgear.
With the aid of the approval symbols listed below you can quickly see which approvals are available for the related switchgear:

BG-PRÜFZERT	Switchgears with this symbol are approved by an employers' liability insurance association (Berufsgenossenschaft, BG)
c UL us	Switches with this symbol are approved by Underwriters Laboratories (UL, Canada and USA)

Explanation of symbols

Connection options

STOP	Suitable for the connection of emergency stop
	Suitable for the connection of safety switches according to EN 1088
	Suitable for the connection of electro-sensitive protective equipment, e. g. light curtains
	Suitable for the connection of 2-hand circuits

Fault detection

+	Short circuit is detected
– +	Ground fault is detected
– +	Earth fault is detected

Time-delay

	Safety contacts switch time-delayed

Safety category

Cat. 3	Suitable up to category 3 according to EN 954-1
Cat. 4	Suitable up to category 4 according to EN 954-1

Stop category

STOP 0	Immediate shutdown stop category 0 according to EN 60204-1
STOP 1	Time-delayed shutdown stop category 1 according to EN 60204-1

Technical data

	Mechanical data
+ –	Electrical data

Subject to technical modifications; no responsibility is accepted for the accuracy of this information.

Selection table for safety relays ESM

Safety relays

- **BL** Non-time-delay category 3
- **BA** Non-time-delay category 4
- **BT** Time-delay/non-time-delay category 4
- **2H** 2-hand requirement level IIIC according to EN 574

Contact expansion

- **ES** Non-time-delay category 4
- **TE** Time-delay category 4

Category according to EN 954-1

- **K** Category according to EN 954-1

Enable path

- **SU** Safety contacts non-time-delay
- **SV** Safety contacts time-delay
- **M** Auxiliary contacts

Relay start

- **A** Automatic start
- **M** Start button
- **U** Monitored start button

Monitoring

- **R** Feedback loop
- **Q** Short circuit monitoring
- **E** Earth fault monitoring
- **M** Ground fault monitoring

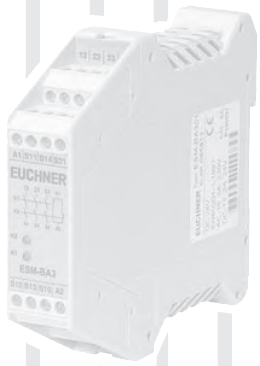

Devices							Outputs			Start			Monitoring				Page
BL	BA	BT	2H	ES	TE	K	SU	SV	M	A	M	U	R	Q	E	M	
●						3	2			●	●		●				8
	●					4	2			●	●	●	●	●	●	●	9
	●					4	3		1	●	●	●	●	●	●	●	9
		●				4	1	3		●	●	●	●	●	●	●	10
		●				4	2	2		●	●	●	●	●	●	●	10
		●				4	3	1		●	●	●	●	●	●	●	10
			●			4	2					●	●	●	●	●	11
				●		4	3		1						●	●	12
					●	4		3	1						●	●	13

Safety relays ESM-BL.. and ESM-BA..

- **ESM-BL.. up to category 3 according to EN 954-1**
- **ESM-BA.. up to category 4 according to EN 954-1**
- **LED status indicators**
- **1-channel or 2-channel control**
- **Up to 3 redundant safety contacts**
- **Auxiliary contact optional**
- **Short circuit and earth fault/ground fault monitoring optional**

Relay outputs
The outputs are electrically decoupled and of redundant design

Connection options
By using suitable wiring the following functions can be selected:
- Relay start with automatic start or a start button
- Monitoring of downstream relays or contactors

On the series **ESM-BA..** safety relays, by using suitable wiring it is also possible to select:
- Simultaneity monitoring to monitor safety components over time
- Relay start using a monitored start button
- Short circuit monitoring to detect short circuits between the connection cables and to shut down the outputs or prevent relay starting if necessary
- Earth fault/ground fault monitoring to detect short circuits between the connection cables and earth or ground and to shut down the outputs or prevent relay starting if necessary

Auxiliary contacts
On series ESM-BA3.. relays an electrically separate normally closed contact is available as an auxiliary contact

Safety relay ESM-BL..

Cat. 3 | STOP 0

Dimension drawing

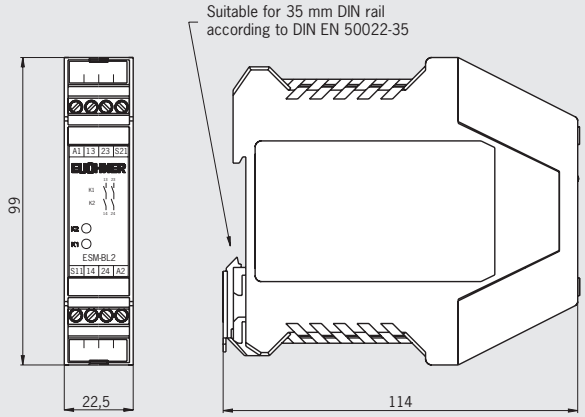

Block diagram

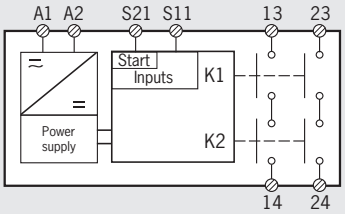

Technical data outputs

Parameter		Value		
Minimum switching current at 24 V DC		20 mA		
Maximum switching voltage		DC 24 V / AC 250 V		
Utilization category * according to EN IEC 60947-5-1		U_e	I_e	ΣI_e
	AC-12	250 V	6 A	12 A
	AC-15	230 V	4 A	
	DC-12	24 V	1,25 A	
	DC-13	24 V	2 A	

U_e = Switching voltage
I_e = Maximum switching current per contact
ΣI_e = Maximum switching current for all safety contacts (cumulative current)
* See page 29 for informaton about the utilization category

Ordering table

Series	Version	Outputs	AC/DC 24 V	AC 115 V	AC 230 V
ESM	**BL** Safety relay	**2** 2 NO	**085 607** ESM-BL201	**085 608** ESM-BL202	**085 609** ESM-BL203

Subject to technical modifications; no responsibility is accepted for the accuracy of this information.

Safety relay ESM-BA2..

Dimension drawing

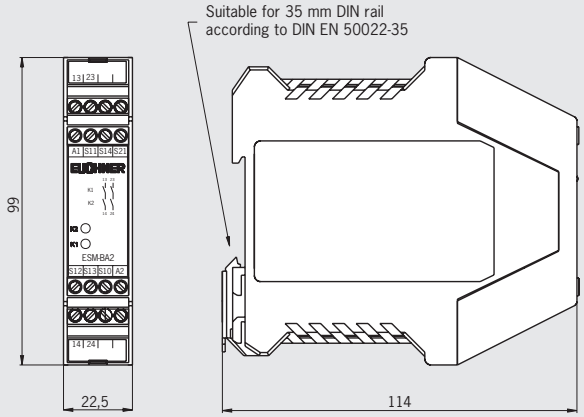

Block diagram

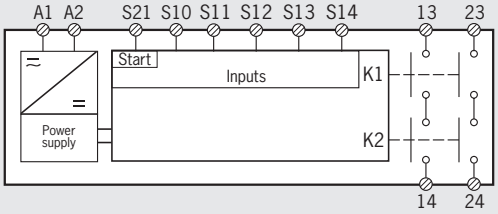

Safety relay ESM-BA3..

Dimension drawing

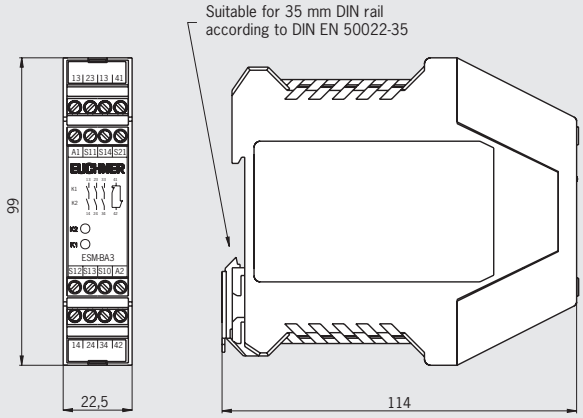

Block diagram

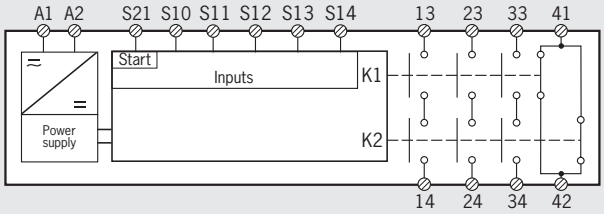

Technical data outputs

Parameter		Value		
Minimum switching current at 24 V DC		20 mA		
Maximum switching voltage		DC 24 V / AC 250 V		
Utilization category * according to EN IEC 60947-5-1		U_e	I_e	ΣI_e
	AC-12	250 V	6 A	12 A
	AC-15	230 V	4 A	
	DC-12	24 V	1,25 A	
	DC-13	24 V	2 A	

U_e = Switching voltage
I_e = Maximum switching current per contact
ΣI_e = Maximum switching current for all safety contacts (cumulative current)
* See page 29 for informaton about the utilization category

Parameter		Value			
Minimum switching current at 24 V DC		20 mA			
Maximum switching voltage		DC 24 V / AC 250 V			
Utilization category * according to EN IEC 60947-5-1	ESM-BA301		U_e	I_e	ΣI_e
		AC-12	Ue 250 V	8 A	15 A
		AC-15	Ue 250V	3 A	
		DC-12	Ue 24 V	2 A	
		DC-13	Ue 24 V	2 A	
	ESM-BA302	AC-12	Ue 250 V	8 A	
	ESM-BA303	AC-15	Ue 250V	3 A	
		DC-12	Ue 50 V	8 A	
		DC-13	Ue 24 V	3 A	

U_e = Switching voltage
I_e = Maximum switching current per contact
ΣI_e = Maximum switching current for all safety contacts (cumulative current)
* See page 29 for informaton about the utilization category

Ordering table

Series	Version	Outputs	AC/DC 24 V	AC 115 V	AC 230 V
ESM	BA Safety relay	2 2 NO	085 610 ESM-BA201	085 611 ESM-BA202	085 612 ESM-BA203
		3 3 NO + 1 NC	085 613 ESM-BA301	087 412 ESM-BA302	087 413 ESM-BA303

For technical data see page 21

Safety relay ESM-BT..

- **Up to category 4 according to EN 954-1**
- **LED status indicators**
- **1-channel or 2-channel control**
- **4 redundant safety contact of which 1, 2 or 3 contacts time-delayed**
- **Time delay can be adjusted between 1 s and 30 s**
- **Short circuit and earth fault/ground fault monitoring**

Relay outputs
The outputs are electrically decoupled and of redundant design

Connection options
By using suitable wiring the following functions can be selected:
- Relay start with automatic start, a start button or a monitored start button
- Monitoring of downstream relays or contactors
- Simultaneity monitoring to monitor safety components over time
- Short circuit monitoring to detect short circuits between the connection cables and to shut down the outputs or prevent relay starting if necessary
- Earth fault/ground fault monitoring to detect short circuits between the connection cables and earth or ground and to shut down the outputs or prevent relay starting if necessary

Time-delayed shutdown
The release time for the time-delay contacts can be set as required using a potentiometer on the safety relay.

Safety relay ESM-BT..

Dimension drawing

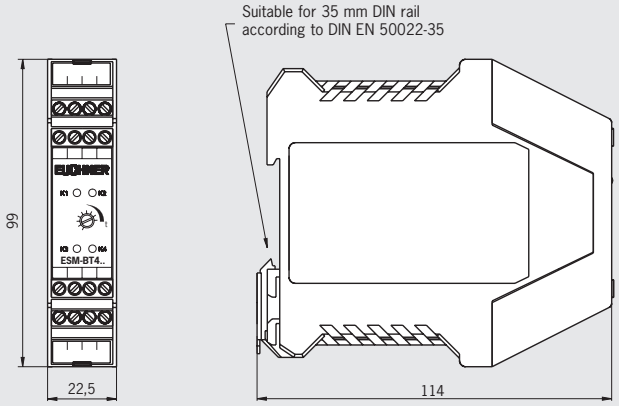

Block diagram

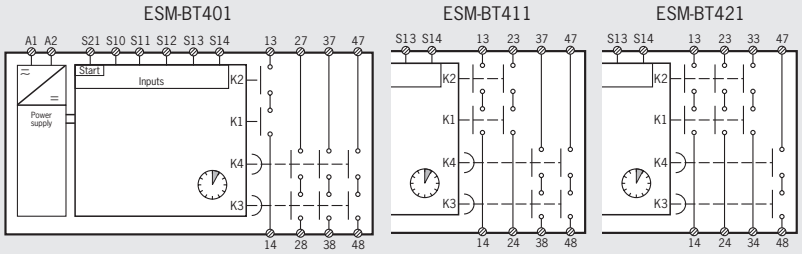

Technical data outputs

Parameter		Value		
Minimum switching current at 24 V DC		20 mA		
Maximum switching voltage		DC 50 V / AC 250 V		
Utilization category * according to EN IEC 60947-5-1		U_e	I_e	ΣI_e
	AC-12	250 V	8 A	15 A
	AC-15	250 V	3 A	
	DC-12	50 V	8 A	
	DC-13	24 V	3 A	

U_e = Switching voltage
I_e = Maximum switching current per contact
ΣI_e = Maximum switching current for all safety contacts (cumulative current)
* See page 29 for informaton about the utilization category

Ordering table

Series	Version	Outputs	AC/DC 24 V
ESM	BT Safety relay	**401** 1 NO non-time-delay 3 NO time-delay	**090 818** ESM-BT401
		411 2 NO non-time-delay 2 NO time-delay	**090 819** ESM-BT411
		421 3 NO non-time-delay 1 NO time-delay	**090 820** ESM-BT421

Subject to technical modifications; no responsibility is accepted for the accuracy of this information.

Safety relay ESM-2H..

- **Up to category 4 according to EN 954-1**
- **Requirement level IIIC according to EN 574**
- **LED status indicators**
- **Operation using 2-hand control**
- **2 redundant safety contacts**
- **Short-circuit and earth fault/ground fault monitoring can be selected**

Relay outputs
The outputs are electrically decoupled and of redundant design

Connection
- Two buttons each with one normally closed contact and one normally open contact that are monitored for simultaneity according to EN 574. In this way a high level of protection against tampering is provided.
- Short circuit monitoring to detect short circuits between the connection cables and to shut down the outputs or prevent relay starting if necessary
- Earth fault/ground fault monitoring to detect short circuits between the connection cables and earth or ground and to shut down the outputs or prevent relay starting if necessary

Connection option
By using suitable wiring the following function can be selected:
- Monitoring of downstream relays or contactors

Safety relay ESM-2H..

Cat. 4 | STOP 0

Dimension drawing

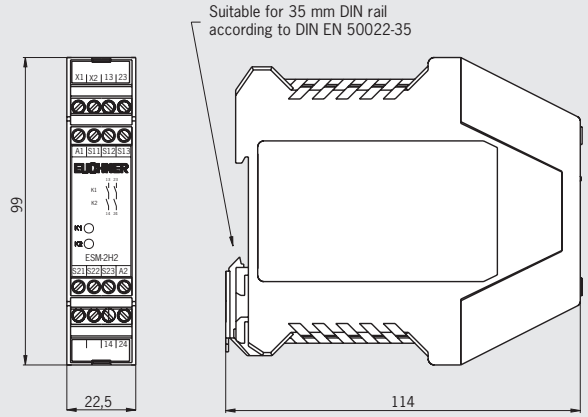

Block diagram

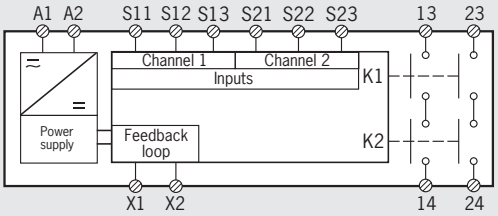

Technical data outputs

Parameter	Value			
Minimum switching current at 24 V DC	20 mA			
Maximum switching voltage	DC 24 V / AC 250 V			
Utilization category * according to EN IEC 60947-5-1		U_e	I_e	ΣI_e
	AC-12	250 V	6 A	8,4 A
	AC-15	230 V	4 A	
	DC-12	24 V	1,25 A	
	DC-13	24 V	2 A	

U_e = Switching voltage
I_e = Maximum switching current per contact
ΣI_e = Maximum switching current for all safety contacts (cumulative current)
* See page 29 for informaton about the utilization category

Ordering table

Series	Version	Outputs	AC/DC 24 V	AC 115 V	AC 230 V
ESM	**2H2** Safety relay	**2** 2 NO	**085 620** ESM-2H201	**098 345** ESM-2H202	-

For technical data see page 21

Contact expansion ESM-ES..

- **Up to category 4 according to EN 954-1**
- **LED status indicators**
- **Control using safety relays**
- **3 redundant safety contacts**
- **1 auxiliary contact**
- **Earth fault/ground fault monitoring can be selected**

Relay outputs
The outputs are electrically decoupled and of redundant design

Connection option
By using suitable wiring the following function can be selected:
- Earth fault/ground fault monitoring to detect short circuits between the connection cables and earth or ground and to shut down the outputs or prevent relay starting if necessary

Contact expansion ESM-ES..

Cat. 4 | STOP 0

Dimension drawing

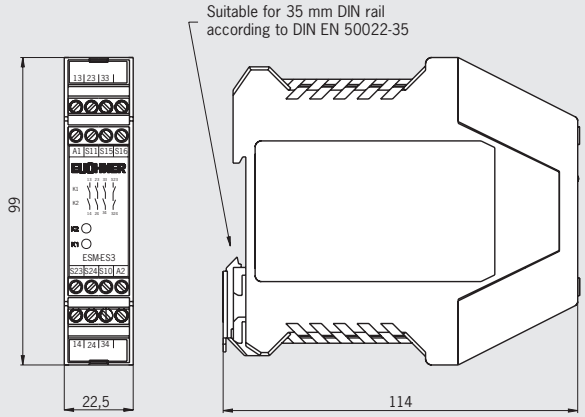

Block diagram

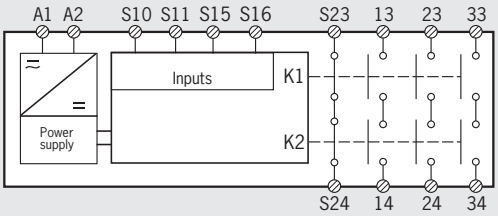

Technical data outputs

Parameter		Value		
Minimum switching current at 24 V DC		20 mA		
Maximum switching voltage		DC 50 V / AC 250 V		
Utilization category * according to EN IEC 60947-5-1		U_e	I_e	ΣI_e
	AC-12	250 V	6 A	12 A
	AC-15	230 V	4 A	
	DC-12	24 V	1,25 A	
	DC-13	24 V	2 A	

U_e = Switching voltage
I_e = Maximum switching current per contact
ΣI_e = Maximum switching current for all safety contacts (cumulative current)
* See page 29 for informaton about the utilization category

Ordering table

Series	Version	Outputs	AC/DC 24 V	AC 115 V	AC 230 V
ESM	ES Contact expansion	3 3 NO + 1 NC	085 614 ESM-ES301	085 615 ESM-ES302	085 616 ESM-ES303

Subject to technical modifications; no responsibility is accepted for the accuracy of this information.

Contact expansion ESM-TE..

- **Up to category 4 according to EN 954-1**
- **LED status indicators**
- **Control using safety relays**
- **3 redundant time-delayed safety contacts**
- **Time delay can be adjusted between 1 s and 30 s**
- **1 auxiliary contact**
- **Earth fault/ground fault monitoring can be selected**

Relay outputs
The outputs are electrically decoupled and of redundant design

Connection option
By using suitable wiring the following function can be selected:
- Earth fault/ground fault monitoring to detect short circuits between the connection cables and earth or ground and to shut down the outputs or prevent relay starting if necessary

Time-delayed shutdown
The release time for the time-delay contacts can be set as required using a potentiometer on the safety relay.

Contact expansion ESM-TE..

Cat. 4 | STOP 1

Dimension drawing

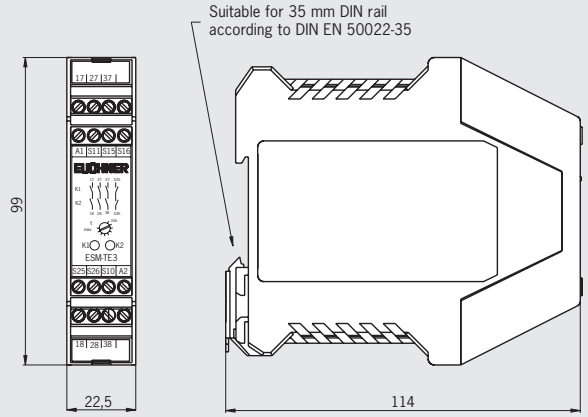

Block diagram

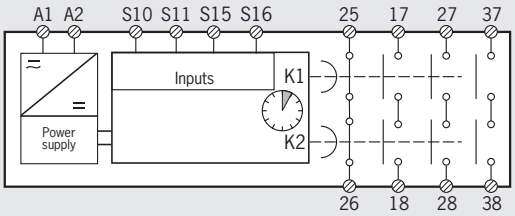

Technical data outputs

Parameter	Value			
Minimum switching current at 24 V DC	20 mA			
Maximum switching voltage	DC 50 V / AC 250 V			
Utilization category * according to EN IEC 60947-5-1		U_e	I_e	ΣI_e
	AC-12	250 V	6 A	10,5 A
	AC-15	250 V	4 A	
	DC-12	24 V	1,25 A	
	DC-13	24 V	2 A	

U_e = Switching voltage
I_e = Maximum switching current per contact
ΣI_e = Maximum switching current for all safety contacts (cumulative current)
* See page 29 for informaton about the utilization category

Ordering table

Series	Version	Outputs	AC/DC 24 V	AC 115 V	AC 230 V
ESM	TE Contact expansion	3 3 NO + 1 NC time-delayed	085 617 ESM-TE301	085 618 ESM-TE302	085 619 ESM-TE303

For technical data see page 21

Selection table for safety modules ESM-F

Safety module

BSN	Base unit
BMN	Base unit with diverse inputs
ISI	Input module 1-channel or 2-channel
IMI	Input module 2-channel with diverse inputs
I3I	Input module 2-channel
ILI	Input module 2-channel, without short circuit/earth fault/ground fault monitoring
OSN	Output module
OTN	Output module time-delayed, time adjustable
OT05N	Output module time-delayed, fixed time 0.5 s

Category according to EN 954-1

K	Category according to EN 954-1

Inputs

E1	1-channel
E2	2-channel

Outputs

SU	Safety contacts non-time-delay
SV	Safety contacts time-delay
M	Monitoring outputs and auxiliary contacts
G	Group outputs

Monitoring

R	Feedback loop
Q	Short circuit monitoring
E	Earth fault monitoring
M	Ground fault monitoring

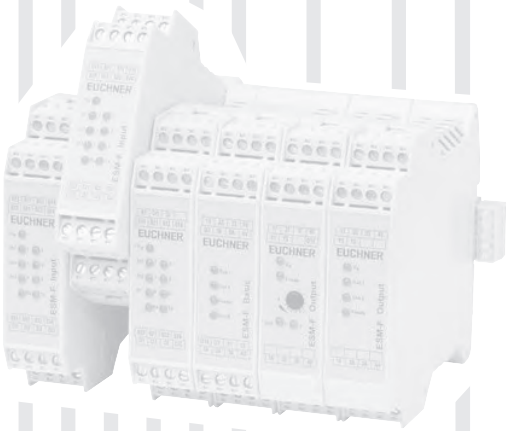

Devices										Inputs		Outputs				Monitoring				Comment	Page
BSN	BMN	ISI	IMI	I3I	ILI	OSN	OTN	OT05N	K	E1	E2	SU	SV	M	G	R	Q	E	M		
●									4		2	3		6	●	●	●	●	●		16
	●								4		2	3		6	●	●	●	●	●	Diverse inputs	16
		●							4		2			2	●		●	●	●		17
		●							4	6				3			●	●	●		17
			●						4		3			3			●	●	●	Diverse inputs	17
				●					4		3			3			●	●	●		17
					●				4		3			3							17
						●			4			4				●					18
						●			4			3		1		●					18
							●		4				4	1		●				Time adjustable	19
								●	4				4	1		●				Fixed time 0.5 s	19

Base units ESM-F-B..

1)

- **Up to category 4 according to EN 954-1**
- **2-channel control**
- **3 redundant safety contacts**
- **6 semiconductor outputs**
- **Group inputs and group outputs**
- **Short circuit and earth fault/ground fault monitoring**
- **LED status and diagnostic indicators**

Function

The ESM-F-B forms the central control unit in the overall system or a logical group, if a system is divided into several segments with different safety-related functions.
The ESM-F-BSN... is suitable for the connection of NC contacts, the ESM-F-BMN... for the connection of safety switches with NC/NO contacts, e. g. CMS safety switches.

Both have:

- Start button, monitored start button or autostart
- Feedback loop
- 2 inputs (each 2-channel with short circuit and ground fault monitoring)
- 3 NO safety contacts (each redundant and fault monitored)
- 6 semiconductor outputs
- LED indicators for device status as well as the state of the inputs and outputs
- Inputs for forming groups (see section *Setting up safety groups*, page 5)

Monitoring outputs

The *On* state of the related monitoring output corresponds to the following signals:

- O1, O2: input circuit 1 or 2 on the base unit closed (safe)
- OI: all input modules on the left in the *On* state
- OG: group signal is present
- OY: feedback loop closed
- O14: safety contacts on the base unit closed, starting command for output modules

Important: two connection sets must be ordered for each base unit (see page 20).

Base units ESM-F-B..

Dimension drawing

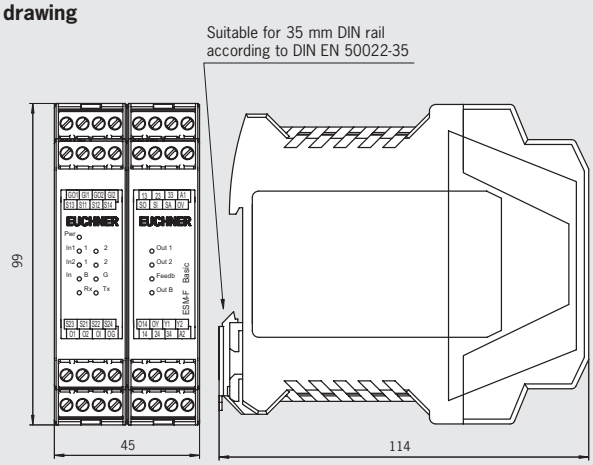

Block diagram

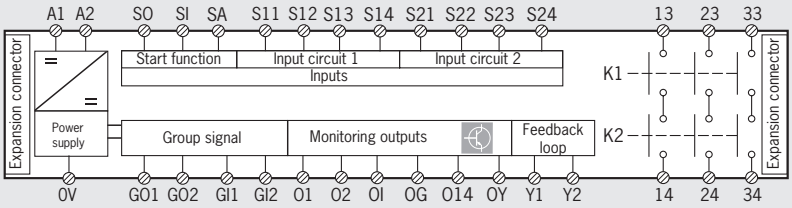

Technical data outputs

Parameter		Value		
Minimum switching curent at 24 V DC		20 mA		
Maximum switching voltage		DC 50 V / AC 250 V		
Utilization category * according to EN 60947-5-1		U_e	I_e	ΣI_e
	AC-12	250 V	8 A	10 A
	AC-15	250 V	3 A	
	DC-12	50 V	8 A	
	DC-13	24 V	3 A	

U_e = Switching voltage
I_e = Maximum switching current per contact
ΣI_e = Maximum switching current for all safety contacts (cumulative current)
* See page 29 for information about the utilization category

Ordering table

Series	Version	Inputs	Outputs	24 V DC
ESM-F	**BSN** Base unit	**2C2** 2, 2-channel	**O2** 2 NO	**095 120** ESM-F-BSN-2C2O2
	BMN Base unit	**2C2** 2, 2-channel diverse	**O2** 2 NO	on request

1) BG approval pending

Subject to technical modifications; no responsibility is accepted for the accuracy of this information.

Input modules ESM-F-I..

1)

- **Up to category 4 according to EN 954-1**
- **2-channel control**
- **1-channel control optional**
- **2 semiconductor outputs**
- **Group outputs (only ESM-F-ISI-2C2)**
- **Short circuit and earth fault/ground fault monitoring (not on ESM-F-ILI-3C2)**
- **LED status and diagnostic indicators**

Function

Safety components with NC contacts such as safety switches, emergency stop buttons, etc. can be connected to the input modules ESM-F-ISI.... The version ESM-F-IMI... is suitable for the connection of safety switches with NC/NO contacts, e. g. CMS-safety switches.
The input modules detect the switch state of each safety component connected and signal this information to the base unit.

They have:

- Six 1-channel or three 2-channel inputs with short circuit and ground fault monitoring
- 3 semiconductor outputs
- LED indicators for device status as well as the state of the inputs and outputs

On ESM-F-ISI-2C2 also:

- Outputs for forming groups (see section *Setting up safety groups*, page 5)

ESM-F-ILI-3C2 has no short circuit/earth fault/ground fault monitoring and is suitable for safety sensors that have internal monitoring with pulsed signals. These sensors are primarily non-contact optical safety sensors.

Monitoring outputs

The *On* state of the related monitoring output corresponds to the following signals:

- O1, O2, O3 input circuit 1 or 2 or 3 is closed (safe)

On ESM-F-ISI-6C1:

- O1, O2, O3 input circuits 1 and 2 or 3 and 4 or 5 and 6 are closed (safe)

Important: one connection set must be ordered for each input module (see page 20).

Input modules ESM-F-I..

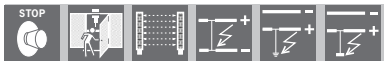

Cat. 4

Dimension drawing

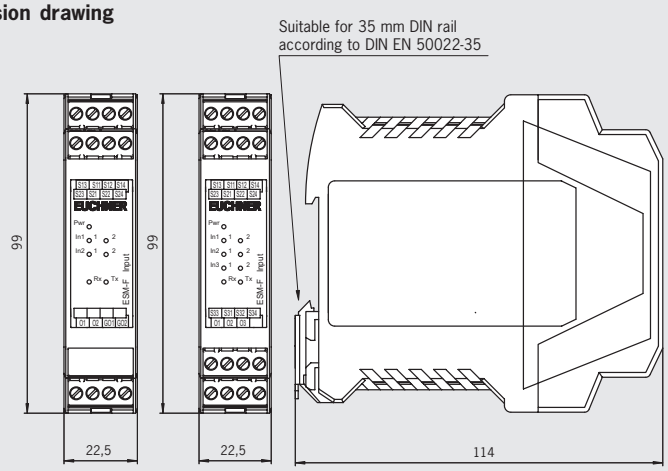

Block diagram

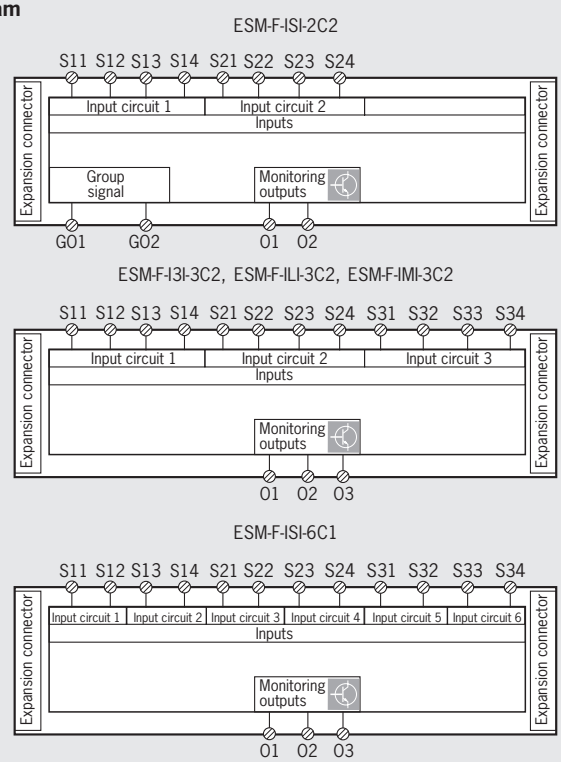

Ordering table

Series	Version	Inputs	24 V DC
ESM-F	**ISI** Input module	**2C2** 2, 2-channel, with group signal	**095 122** ESM-F-ISI-2C2
		6C1 6, 1-channel, without group signal	**095 123** ESM-F-ISI-6C1
	IMI Input module	**3C2** 3, 2-channel diverse, without group signal	**095 124** ESM-F-IMI-3C2
	I3I Input module	**3C2** 3, 2-channel, without group signal	**095 916** ESM-F-I3I-3C2
	ILI Input module	**3C2** 3, 2-channel, without group signal, without short circuit/earth fault/ground fault monitoring	**097 577** ESM-F-ILI-3C2

1) BG approval pending

For technical data see page 21

Output modules ESM-F-OS..

1)

- **Up to category 4 according to EN 954-1**
- **3 or 4 redundant safety contacts**
- **1 auxiliary contact optional**
- **LED status and diagnostic indicators**

Output modules ESM-F-OS..

STOP 0 | Cat. 4

Function

The output modules ESM-F-OS... are operated via the base unit. The output modules can be used to directly switch power components such as contactors, motors, etc.

Depending on the version they have:

- Three or four NO contacts (each redundant and fault monitored)
- LED indicators for device status as well as the state of the inputs and outputs
- Feedback loop for contacts connected after the outputs

Auxiliary contact

As an option an NC contact for use as an auxiliary contact can be selected instead of an NO contact.

Important: one connection set must be ordered for each output module (see page 20).

Dimension drawing

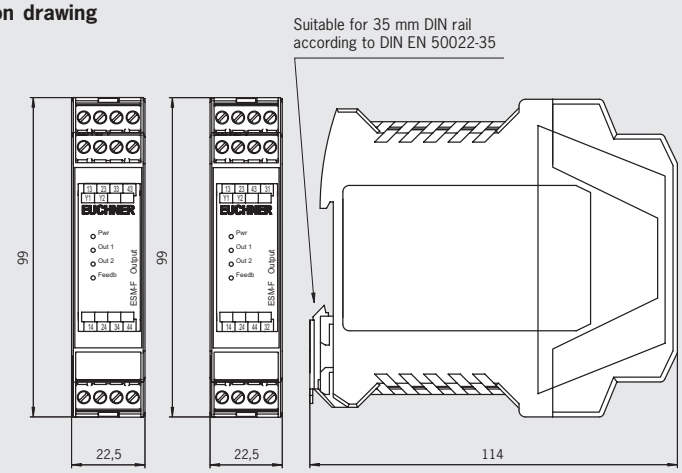

Block diagram

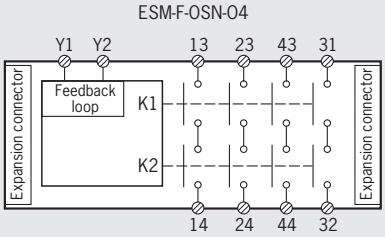

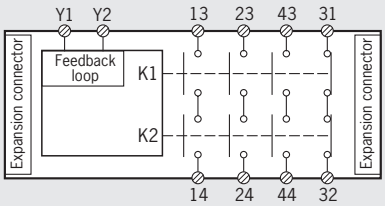

Technical data outputs

Parameter	Value			
Minimum switching curent at 24 V DC	20 mA			
Maximum switching voltage	DC 50 V / AC 250 V			
Utilization category * according to EN 60947-5-1		U_e	I_e	ΣI_e
	AC-12	250 V	8 A	10 A
	AC-15	250 V	3 A	
	DC-12	50 V	8 A	
	DC-13	24 V	3 A	

U_e = Switching voltage
I_e = Maximum switching current per contact
ΣI_e = Maximum switching current for all safety contacts (cumulative current)
* See page 29 for information about the utilization category

Ordering table

Series	Version	Outputs	24 V DC
ESM-F	OSN Output module	O4 4 NO	095 125 ESM-F-OSN-O4
		O3M1 3 NO + 1 NC	096 208 ESM-F-OSN-O3M1

1) BG approval pending

Subject to technical modifications; no responsibility is accepted for the accuracy of this information.

Time-delayed output modules ESM-F-OT..

1)

- **Up to category 4 according to EN 954-1**
- **4 redundant time-delayed safety contacts**
- **1 semiconductor output**
  Time delay adjustable between 1 s and 30 s or fixed time of 0.5 s optional
- **LED status and diagnostic indicators**

Time-delayed output modules ESM-F-OT..

STOP 1 | Cat. 4

Dimension drawing

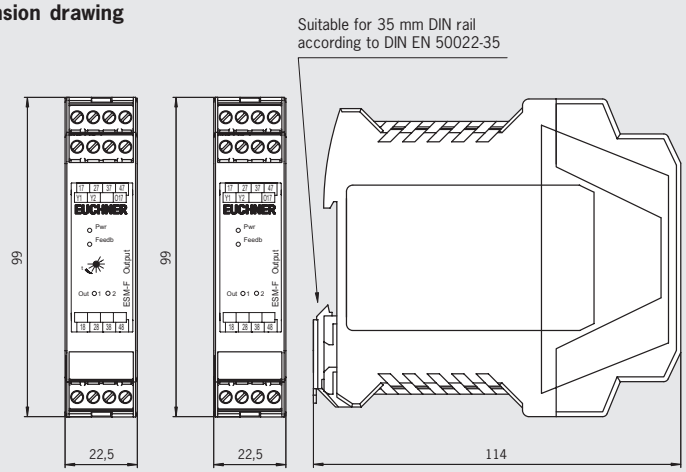

Block diagram

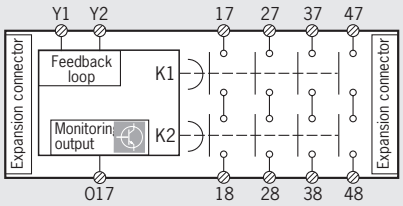

Function

The output modules ESM-F-OT... are operated via the base unit. The output modules can be used to switch power components such as contactors, motors, etc. directly or with a time-delay

Depending on the version they have:

- Four NO contacts (each redundant and fault monitored) with adjustable or fixed time-delay
- LED indicators for device status as well as the state of the inputs and outputs
- Feedback loop for contacts connected after the outputs

Monitoring outputs

The *On* state of the related monitoring output corresponds to the following signal:

- O17: switch state of the safety contacts

Technical data outputs

Parameter		Value		
Minimum switching curent at 24 V DC		20 mA		
Maximum switching voltage		DC 50 V / AC 250 V		
Utilization category * according to EN 60947-5-1		U_e	I_e	ΣI_e
	AC-12	250 V	8 A	10 A
	AC-15	250 V	3 A	
	DC-12	50 V	8 A	
	DC-13	24 V	3 A	

U_e = Switching voltage
I_e = Maximum switching current per contact
ΣI_e = Maximum switching current for all safety contacts (cumulative current)
* See page 29 for information about the utilization category

Important: one connection set must be ordered for each output module (see page 20).

Ordering table

Series	Version	Outputs	24 V DC
ESM-F	**OTN** Time-delayed output module	**O4** 4 NO, time-delayed, adjustable	**095 126** ESM-F-OTN-O4
	OT05N Time-delayed output module	**O4** 4 NO, time-delayed 0.5 s, fixed	**095 917** ESM-F-OT05N-O4

1) BG approval pending

For technical data see page 21

Accessories for safety system ESM-F

▶ **Connection set ESM-F with screw terminals or spring terminals**

Important: two connection sets must be ordered for each base unit. Only one connection set must be ordered per input module and output module.

Ordering table

Designation	Description	Cat. No.
Connection set ESM-F with screw terminals	Comprising: 4 plug-in screw terminals (can be coded) 2 jumpers coding pins	**097 194** ESM-F-AK4
Connection set ESM-F with spring terminals	Comprising: 4 plug-in spring terminals (can be coded) 2 jumpers coding pins	**097 195** ESM-F-KK4

Subject to technical modifications; no responsibility is accepted for the accuracy of this information.

Overview safety relays ESM

Safety relays ESM

BL	Non-time-delay category 3
BA	Non-time-delay category 4
BT	Time-delay/non-time-delay category 4
2H	2-hand requirement level IIIC according to EN 574

Contact expansions ESM

ES	Non-time-delay category 4
TE	Time-delay category 4

Safety relay ESM							Page
BL	BA	BT	2H	ES	TE		
●							22
	●						23
		●					24
			●				24
				●			25
					●		25

Overview modular safety system ESM-F

Base units ESM-F

BSN	Non-time-delay category 4
BMN	Non-time-delay category 4

Input modules ESM-F

ISI	2-channel
IMI	2-channel diverse (NC contact and NO contact)
I3I	2-channel
ILI	2-channel, without short circuit/earth fault/ground fault monitoring

Output modules ESM-F

OSN	Non-time-delay
OTN	Time-delay (adjustable)
OT05N	Time-delay (fixed)

Modular safety system ESM-F									Page
BSN	BMN	ISI	IMI	I3I	ILI	OSN	OTN	OT05N	
●									26
	●								26
		●							27
			●						27
				●					27
					●				27
						●			27
							●		28
								●	28

Housing

Parameter		Value				Unit
Housing material		Polyamide PA6.6				
Dimensions		114 x 99 x 22.5				mm
Weight		Approx. 0.25				kg
Connection type		Connection terminals				
Connection terminals		0.14 … 2.5				mm^2
Ambient temperature	**Base**	**ESM-BL2.. ESM-BA2..**	**ESM-BA3..**	**ESM-BT4..**	**ESM-2H..**	
	at U_B = 24 V DC	-15 ... 60	-15 … 40	-15 … 40	-15 ... 40	°C
	at U_B = 115/230 V AC	-15 ... 40	-15 ... 40	-	-	°C
	Contact expansion	**ESM-ES3.. ESM-TE3...**				
	at U_B = 24 V DC	-15 … 60				°C
	at U_B = 115/230 V AC	-15 ... 40				°C
Degree of protection acc. to EN IEC 60529		IP 20				
Degree of contamination		2				
Mounting		35 mm DIN rail acc. to DIN EN 50022-35				
Life	**Base**	**ESM-BL2.. ESM-BA2.. ESM-BA3..**		**ESM-BT4..**	**ESM-2H..**	
	Mechanical	1 x 10^7		1 x 10^6	1 x 10^7	operating cycles
	Electrical	1 x 10^5		1 x 10^5	1 x 10^5	operating cycles
	Contact expansion	**ESM-ES3.. ESM-TE3...**				
	Mechanical	1 x 10^7				operating cycles
	Electrical	1 x 10^5				operating cycles

Connection ESM-BL2..

Parameter		Value				Unit
Operating voltage	ESM-BL201	24 ± 10% [1]				V AC/DC
	ESM-BL202	115 ± 10%				V AC
	ESM-BL203	230 ± 10%				V AC
Reverse polarity protection		On ESM-BL201				
Rated supply frequency		50 ... 60				Hz
Power consumption		Approx. 4				VA
Control voltage for start button		18.6 … 26				V DC
Control cable length (cross-section 0.75 mm^2)		Max. 1000				m
Control current for start button		Approx. 40				mA
Contact fuses		T4 / F6				A
Rated impulse withstand voltage		2.5				kV
Leakage path and air gap acc. to DIN VDE 0110-1		4				kV
Safety contacts		**2 NO contacts (redundant)**				
Minimum switching current at 24 V DC		20				mA
Maximum switching voltage		24				V DC
		250				V AC
Breaking capacity acc. to c UL us		6 A AC 250 V 2 A DC 24 V				
Utilization category [2] according to EN IEC 60947-5-1			**Ue**	**Ie**	**Σ Ie**	
		AC-12	250 V	6 A	12 A	
		AC-15	230 V	4 A		
		DC-12	24 V	1,25 A		
		DC-13	24 V	2 A		
LED indicators		2, status display for relays K1 and K2				

1) All the electrical connections must either be isolated from the mains supply by a safety transformer according EN IEC 61558-2-6 with limited output voltage in the event of a fault, or by other equivalent isolation measures.

2) See page 29 for information about the utilization category.

U_e = Switching voltage I_e = Maximum switching current per contact ΣI_e = Maximum switching current for all safety contacts (cumulative current)

Subject to technical modifications; no responsibility is accepted for the accuracy of this information.

Connection ESM-BA2..

Parameter		Value				Unit
Operating voltage	ESM-BA201	24 ± 10% [1]				V AC/DC
	ESM-BA202	115 ± 10%				V AC
	ESM-BA203	230 ± 10%				V AC
Reverse polarity protection		On ESM-BA201				
Rated supply frequency		50 ... 60				Hz
Power consumption		Approx. 4				VA
Control voltage for start button		18.6 ... 26				V DC
Control cable length (cross-section 0.75 mm²)		Max. 1000				m
Control current for start button		Approx. 40				mA
Contact fuses		T4 / F6				A
Rated impulse withstand voltage		2.5				kV
Leakage path and air gap acc. to DIN VDE 0110-1		4				kV
Safety contacts		**2 NO contacts (redundant)**				
Minimum switching current at 24 V DC		20				mA
Maximum switching voltage		24				V DC
		250				V AC
Utilization category [2] according to EN IEC 60947-5-1			U_e	I_e	ΣI_e	
		AC-12	250 V	6 A	12 A	
		AC-15	230 V	4 A		
		DC-12	24 V	1,25 A		
		DC-13	24 V	2 A		
LED indicators		2, status display for relays K1 and K2				

Connection ESM-BA3..

Parameter		Value				Unit
Operating voltage	ESM-BA301	24 ± 10% [1]				V AC/DC
	ESM-BA302	115 ± 10%				V AC
	ESM-BA303	230 ± 10%				V AC
Reverse polarity protection		On ESM-BA201				
Rated supply frequency		50 ... 60				Hz
Power consumption		Approx. 7				VA
Control voltage for start button		18.6 ... 26				V DC
Control cable length (cross-section 0.75 mm²)		Max. 1000				m
Control current for start button		Approx. 60				mA
Contact fuses		Slow-blow T6 / quick-blow F8				A
Rated impulse withstand voltage		2.5				kV
Leakage path and air gap acc. to DIN VDE 0110-1		4				kV
Safety contacts		**3 NO contacts (redundant)**				
Minimum switching current at 24 V DC		20				mA
Maximum switching voltage		50				V DC
		250				V AC
Utilization category [2] according to EN IEC 60947-5-1	ESM-BA301		U_e	I_e	ΣI_e	
		AC-12	250 V	8 A	15 A	
		AC-15	250 V	3 A		
		DC-12	24 V	2 A		
		DC-13	24 V	2 A		
	ESM-BA302/303	AC-12	250 V	8 A		
		AC-15	250 V	3 A		
		DC-12	50 V	8 A		
		DC-13	24 V	3 A		
LED indicators		2, status display for relays K1 and K2				
Auxiliary contacts		**1 NC contact**				
Maximum switching voltage		24				V DC
		250				V AC
Utilization category [2] according to EN IEC 60947-5-1			U_e	I_e		
		AC-12	250 V	2 A		
		AC-15	230 V	2 A		
		DC-12	24 V	1,25 A		
		DC-13	24 V	1,25 A		

1) All the electrical connections must either be isolated from the mains supply by a safety transformer according EN IEC 61558-2-6 with limited output voltage in the event of a fault, or by other equivalent isolation measures.

2) See page 29 for information about the utilization category.

U_e = Switching voltage I_e = Maximum switching current per contact ΣI_e = Maximum switching current for all safety contacts (cumulative current)

Connection ESM-BT4..

Parameter		Value			Unit
Operating voltage		24 ± 10% [1]			V AC/DC
Reverse polarity protection		Yes			
Rated supply frequency		50 ... 60			Hz
Power consumption		Approx. 4.6			VA
Time-delay range		1 ... 30			s
Control voltage for start button		18.6 ... 26			V DC
Control cable length (cross-section 0.75 mm²)		Max. 1000			m
Control current for start button		Approx. 190			mA
Contact fuses		Slow-blow T6 / quick-blow F8			A
Rated impulse withstand voltage		2.5			kV
Leakage path and air gap acc. to DIN VDE 0110-1		4			kV
Safety contacts		**4 NO contacts (redundant)**			
Minimum switching current at 24 V DC		20			mA
Maximum switching voltage		50			V DC
		250			V AC
Breaking capacity acc. to c UL us		8 A AC 250 V 2 A DC 24 V			
Utilization category [2] according to EN IEC 60947-5-1		U_e	I_e	ΣI_e	
	AC-12	250 V	8 A	15 A	
	AC-15	250 V	3 A		
	DC-12	50 V	8 A		
	DC-13	24 V	3 A		
LED indicators		4, status display for relays K1 to K4			

Connection ESM-2H..

Parameter		Value			Unit
Operating voltage	ESM-2H201	24 ± 10% [1]			V AC/DC
	ESM-2H202	115 ± 10%			V AC
Reverse polarity protection		Yes			
Rated supply frequency		50 ... 60			Hz
Power consumption		Approx. 4			VA
Control voltage at buttons		18.6 ... 26			V DC
Control cable length (cross-section 0.75 mm²)		Max. 1000			m
Control current for start button		Approx. 40			mA
Contact fuses		T4 / F6			A
Rated impulse withstand voltage		2.5			kV
Leakage path and air gap acc. to DIN VDE 0110-1		4			kV
Safety contacts		**2 NO contacts (redundant)**			
Synchronization time		max. 0.5			s
Release time for the safety relay (response time)		max. 20			ms
Minimum switching current at 24 V DC		20			mA
Maximum switching voltage		24			V DC
		250			V AC
Breaking capacity acc. to c UL us		6 A AC 250 V 2 A DC 24 V			
Utilization category [2] according to EN IEC 60947-5-1		U_e	I_e	ΣI_e	
	AC-12	250 V	6 A	8,4 A	
	AC-15	230 V	4 A		
	DC-12	24 V	1,25 A		
	DC-13	24 V	2 A		
LED indicators		2, status display for relays K1 and K2			

1) All the electrical connections must either be isolated from the mains supply by a safety transformer according EN IEC 61558-2-6 with limited output voltage in the event of a fault, or by other equivalent isolation measures.

2) See page 29 for information about the utilization category.

U_e = Switching voltage I_e = Maximum switching current per contact ΣI_e = Maximum switching current for all safety contacts (cumulative current)

Subject to technical modifications; no responsibility is accepted for the accuracy of this information.

Connection ESM-ES3..

Parameter		Value				Unit
Operating voltage	ESM-ES301	24 ± 10% [1]				V AC/DC
	ESM-ES302	115 ± 10%				V AC
	ESM-ES303	230 ± 10%				V AC
Reverse polarity protection		On ESM-ES301				
Rated supply frequency		50 ... 60				Hz
Power consumption		Approx. 4				VA
Control voltage at inputs		18.6 ... 26				V DC
Control cable length (cross-section 0.75 mm²)		Max. 1000				m
Contact fuses		T4 / F6				A
Rated impulse withstand voltage		2.5				kV
Leakage path and air gap acc. to DIN VDE 0110-1		4				kV
Cumulative current of all contacts acc. to c UL us		10.5				A
Safety contacts		**3 NO contacts (redundant)**				
Minimum switching current at 24 V DC		20				mA
Maximum switching voltage		50				V DC
		250				V AC
Breaking capacity acc. to c UL us		6 A AC 250 V 2 A DC 24 V				
Utilization category [2] according to EN IEC 60947-5-1			U_e	I_e	ΣI_e	
		AC-12	250 V	6 A	12 A	
		AC-15	230 V	4 A		
		DC-12	24 V	1,25 A		
		DC-13	24 V	2 A		
LED indicators		2, status display for relays K1 and K2				
Auxiliary contacts		**1 NC contact**				
Continuous current max.		500				mA
Maximum switching voltage		24				V AC/DC

Connection ESM-TE3..

Parameter		Value				Unit
Operating voltage	ESM-TE301	24 ± 10% [1]				V AC/DC
	ESM-TE302	115 ± 10%				V AC
	ESM-TE303	230 ± 10%				V AC
Reverse polarity protection		On ESM-TE301				
Rated supply frequency		50 ... 60				Hz
Power consumption		Approx. 4				VA
Time-delay range		1 ... 30				s
Control voltage at inputs		18.6 ... 26				V DC
Control cable length (cross-section 0.75 mm²)		Max. 1000				m
Contact fuses		T4 / F6				A
Rated impulse withstand voltage		2.5				kV
Leakage path and air gap acc. to DIN VDE 0110-1		4				kV
Cumulative current of all contacts acc. to c UL us		10.5				A
Safety contacts		**3 NO contacts (redundant)**				
Minimum switching current at 24 V DC		20				mA
Maximum switching voltage		50				V DC
		250				V AC
Breaking capacity acc. to c UL us		6 A AC 250 V 2 A DC 24 V				
Utilization category [2] according to EN IEC 60947-5-1			U_e	I_e	ΣI_e	
		AC-12	250 V	6 A	10,5 A	
		AC-15	250 V	4 A		
		DC-12	24 V	1,25 A		
		DC-13	24 V	2 A		
LED indicators		2, status display for relays K1 and K2				
Auxiliary contacts		**1 NC contact**				
Continuous current max.		500				mA
Maximum switching voltage		24				V DC

1) All the electrical connections must either be isolated from the mains supply by a safety transformer according EN IEC 61558-2-6 with limited output voltage in the event of a fault, or by other equivalent isolation measures.

2) See page 29 for information about the utilization category.

U_e = Switching voltage I_e = Maximum switching current per contact ΣI_e = Maximum switching current for all safety contacts (cumulative current)

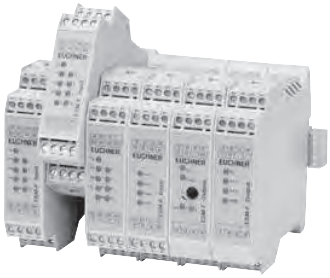

Housing

Parameter		Value			Unit
Housing material		Polyamide PA6.6			
Dimensions		**ESM-F-B..**	**ESM-F-I..**	**ESM-F-O..**	
		114 x 99 x 45	114 x 99 x 22.5	114 x 99 x 22.5	mm
Weight		Approx. 0.26	Approx. 0.13	Approx. 0.18	kg
Connection type		Plug-in connection terminals			
Connection terminals		0.14 ... 2.5			mm^2
Ambient temperature		-15 ... +55			°C
Degree of protection acc. to EN IEC 60529		IP 20			
Degree of contamination		2			
Mounting		Expansion connector on DIN rail 35 mm according to DIN EN 50022-35			
Life	Mechanical	1 x 10^7 operating cycles			
	Electrical	1 x 10^5 operating cycles			

Connection ESM-F-B..

Parameter		Value			Unit
Operating voltage		24 ± 10% [1]			V DC
Reverse polarity protection		Yes			
Power consumption		Approx. 3.5			VA
Control voltage for start button		18.6 ... 26			V DC
Control cable length max. (cross-section 0.75 mm^2)		1000			m
Current consumption max.	without monitoring outputs	140			mA
	with monitoring outputs	320			mA
Contact fuses		Slow-blow T6 / quick-blow F8			A
Rated impulse withstand voltage		2.5			kV
Leakage path and air gap acc. to DIN VDE 0110-1:1997-04		4			kV
Safety contacts		**3 NO contacts (redundant)**			
Minimum switching current at 24 V DC		20			mA
Maximum switching voltage		24			V DC
		250			V AC
Utilization category [2] according to EN IEC 60947-5-1			U_e	I_e	ΣI_e
		AC-12	250 V	8 A	10 A
		AC-15	250 V	3 A	
		DC-12	50 V	8 A	
		DC-13	24 V	3 A	
LED indicators		13, diagnostics and status			
Monitoring outputs (semiconductor)		**6 semiconductor outputs**			
Short circuit-proof		Yes			
Continuous current max.		30			mA
Output voltage		24			V DC
Inputs					
Circuit	ESM-F-BSN...	2 inputs, NC contact/NC contact, 2-channel with short circuit monitoring and ground fault monitoring			
	ESM-F-BMN...	2 inputs, NC contact/NO contact, 2-channel with short circuit monitoring and ground fault monitoring			

1) All the electrical connections must either be isolated from the mains supply by a safety transformer according EN IEC 61558-2-6 with limited output voltage in the event of a fault, or by other equivalent isolation measures.

2) See page 29 for information about the utilization category.

U_e = Switching voltage I_e = Maximum switching current per contact ΣI_e = Maximum switching current for all safety contacts (cumulative current)

Subject to technical modifications; no responsibility is accepted for the accuracy of this information.

Connection ESM-F-I..

Parameter		Value	Unit
Operating voltage		24 ± 10% [1]	V DC
Reverse polarity protection		Yes	
Power consumption		Approx. 4.2	VA
Control cable length max. (cross-section 0.75 mm²)		1000	m
Current consumption max.	without monitoring outputs	100	mA
	with monitoring outputs	160 (ESM-F-ISI-2C2) 190 (ESM-F-I3I-3C2, ESM-F-ISI-6C1, ESM-F-IMI-3C2)	mA
LED indicators		9, diagnostics and status	
Monitoring outputs (semiconductor)			
Short circuit-proof		Yes	
Continuous current max. per output		30	mA
Output voltage		24	V DC
Inputs			
Circuit	ESM-F-I3I-3C2	3 inputs, NC contact/NC contact, 2-channel with short circuit monitoring and ground fault monitoring	
	ESM-F-ILI-3C2	3 inputs, NC contact/NC contact, 2-channel	
	ESM-F-ISI-2C2	2 inputs, NC contact/NC contact, 2-channel with short circuit monitoring and ground fault monitoring outputs for forming a group	
	ESM-F-ISI-6C1	6 inputs, NC contact/NC contact, 1-channel with short circuit monitoring and ground fault monitoring	
	ESM-F-IMI-3C2	3 inputs, NC contact/NO contact, 2-channel with short circuit and ground fault monitoring for the connection of safety switches with NO contact/NC contact combination (e.g. CMS from EUCHNER)	

1) Power supplied via expansion connector

Connection ESM-F-O..

Parameter		Value			Unit
Operating voltage		24 ± 10% [1]			V DC
Reverse polarity protection		Yes			
Power consumption		Approx. 2.4			VA
Current consumption, max.		100			mA
Contact fuses		Slow-blow T6 / quick-blow F8			A
Rated impulse withstand voltage		2.5			kV
Leakage path and air gap acc. to DIN VDE 0110-1:1997-04		4			kV
Safety contacts					
Minimum switching current at 24 V DC		20			mA
Maximum switching voltage		50			V DC
		250			V AC
Utilization category [2] according t EN IEC 60947-5-1		U_e	I_e	ΣI_e	
	AC-12	250 V	8 A	10 A	
	AC-15	250 V	3 A		
	DC-12	50 V	8 A		
	DC-13	24 V	3 A		
LED indicators		4, diagnostics and status			
Auxiliary contacts (on ESM-F-OSN-O3M1)					
Minimum switching current at 24 V DC		20			mA
Maximum switching voltage		50			V DC
		250			V AC
Utilization category [2] according to EN IEC 60947-5-1		U_e	I_e		
	AC-12	250 V	8 A		
	AC-15	250 V	3 A		
	DC-12	50 V	8 A		
	DC-13	24 V	3 A		

1) Power supplied via expansion connector
2) See page 29 for information about the utilization category.
U_e = Switching voltage I_e = Maximum switching current per contact ΣI_e = Maximum switching current for all safety contacts (cumulative current)

Connection ESM-F-OT..

Parameter		Value	Unit
Operating voltage		24 ± 10% [1]	V DC
Reverse polarity protection		Yes	
Power consumption		Approx. 2.4	VA
Time-delay range	ESM-F-OTN…	1 … 30 (adjustable)	s
	ESM-F-OT05N…	0.5 (fixed)	s
Current consumption max.	without monitoring outputs	100	mA
	with monitoring outputs	130	
Contact fuses		Slow-blow T6 / quick-blow F8	A
Rated impulse withstand voltage		2.5	kV
Leakage path and air gap acc. to DIN VDE 0110-1:1997-04		4	kV
Safety contacts		**4 NO contacts (redundant)**	
Minimum switching current at 24 V DC		20	mA
Maximum switching voltage		50	V DC
		250	V AC

Utilization category [2] according to EN IEC 60947-5-1		U_e	I_e	ΣI_e
	AC-12	250 V	8 A	10 A
	AC-15	250 V	3 A	
	DC-12	50 V	8 A	
	DC-13	24 V	3 A	

LED indicators	4, diagnostics and status	
Monitoring outputs (semiconductor)	**1 semiconductor output**	
Short circuit-proof	Yes	
Continuous current max.	30	mA
Output voltage	24	V DC

1) Power supplied via expansion connector
2) See page 29 for information about the utilization category.
U_e = Switching voltage I_e = Maximum switching current per contact ΣI_e = Maximum switching current for all safety contacts (cumulative current)

Subject to technical modifications; no responsibility is accepted for the accuracy of this information.

Glossary

Feedback loop
Components connected downstream of the safety relay can be monitored for correct function. For this purpose normally closed contacts on these components are integrated into the feedback loop on the relay.

Relay start
After the relay has switched off due to a request from a safety component connected, the relay must be re-started.

- Automatic start

The relay switches on automatically as soon as the safety component connected changes back to the safe state. On this topic note the information in EN 954-1, section 5.5, that renewed starting of the machine can only occur automatically if it is ensured that there can be no dangerous state.

- Manual start

The relay is started by actuating a button. First the safe state of the safety components connected must be re-established.

- Monitored, manual start

The relay is started by actuating a button. The button is monitored for jamming or possible tampering. Prior to starting the relay the safe state of the safety components connected must be re-established.

Single-channel safety circuit
A single positively driven contact in the safety component is connected to the relay. This type of connection is suitable for categories 1 or 2 according to EN 954-1.

Dual-channel safety circuit
Two contacts of which at least one is a positively driven contact are connected to the relay. This type of connection is suitable for categories 3 or 4 according to EN 954-1.

Utilization category according to EN IEC 60947-5-1 (excerpt)

Voltage type	Utilization category	Typical applications
AC	AC-12	Controlling resistive load and semi-conductor load in input circuits of optocouplers
	AC-15	Controlling electromagnetic load (> 72 VA)
DC	DC-12	Controlling resistive load and semi-conductor load in input circuits of optocouplers
	DC-13	Controlling electromagnetic loads with economy resistors in the circuit

Connection examples safety relays ESM

Safety relay ESM-BL..

Automatic start without integration of the feedback loop

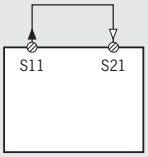

Manual start without integration of the feedback loop

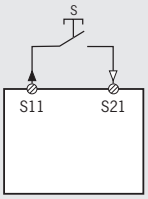

Automatic start with integration of the feedback loop

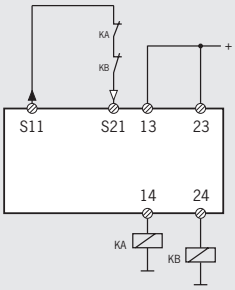

Manual start with integration of the feedback loop

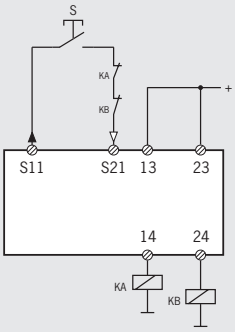

EMERGENCY STOP/safety circuit

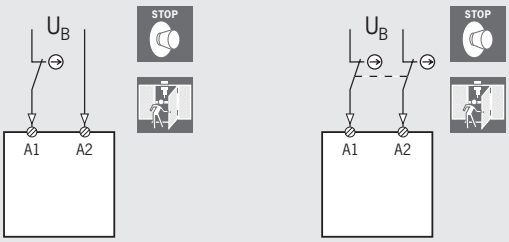

1-channel 2-channel

Safety relays ESM-BA../ESM-BT..

Monitored start without integration of the feedback loop

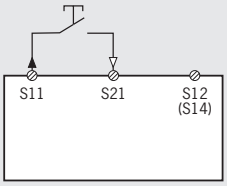

Un-monitored start without integration of the feedback loop

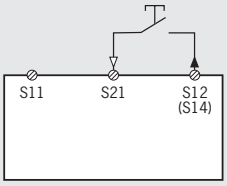

Automatic start without integration of the feedback loop

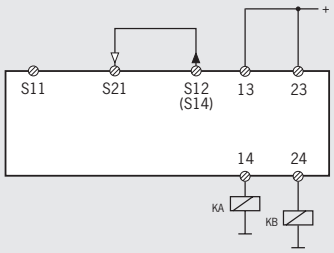

Monitored start with integration of the feedback loop

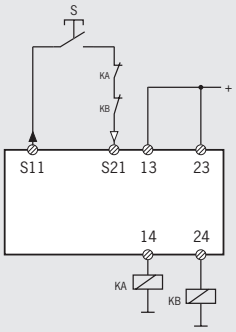

Un-monitored start with integration of the feedback loop

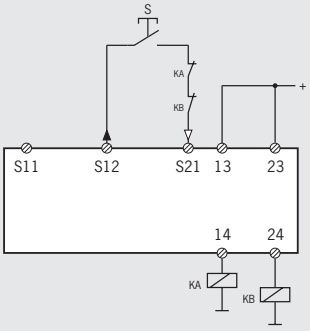

Automatic start with integration of the feedback loop

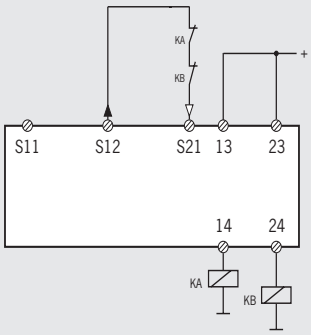

1-channel EMERGENCY STOP/safety circuit

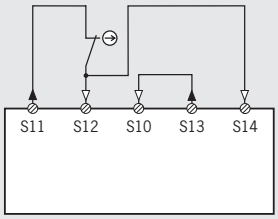

2-channel EMERGENCY STOP/safety circuit
with ground fault/short circuit detection

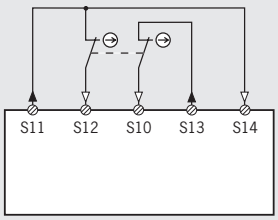

Subject to technical modifications; no responsibility is accepted for the accuracy of this information.

Safety relay ESM-2H2..

Monitoring a 2-hand control

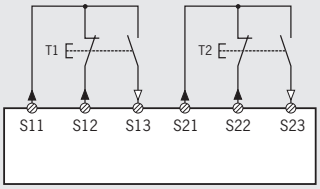

With integration of the feedback loop

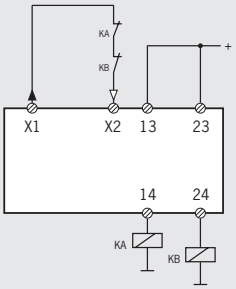

Without integration of the feedback loop

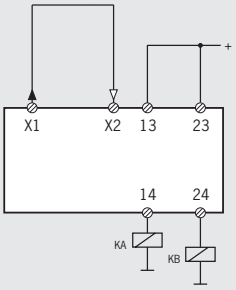

Safety contact expansion ESM-ES../ESM-TE..

Integration of the contact expansion

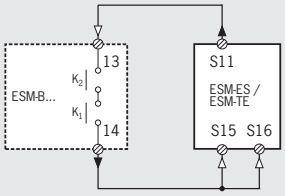

Connection of the contact expansion with automatic start and with integration of the feedback loop

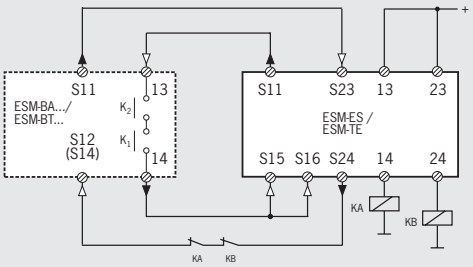

Connection of the contact expansion with manual start and with integration of the feedback loop

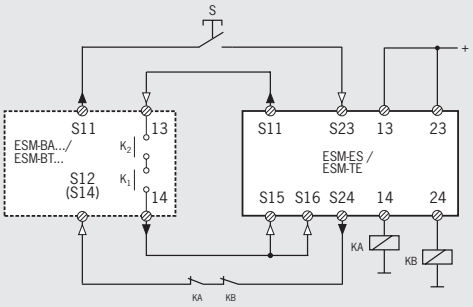

Connection examples safety system ESM-F

Monitored start

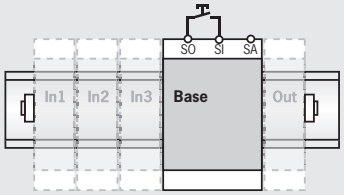

For a monitored start, a start button must be connected between the terminals *SO* and *SI*.
The safety contacts close when the start button is actuated.

Automatic start

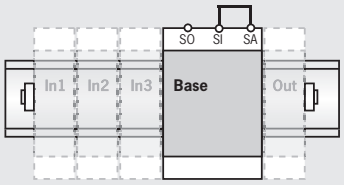

For an automatic start, a bridge must be connected between the terminals *SI* and *SA*.
The safety contacts close immediately if all safety circuits connected are closed.

Safety inputs on the ESM-F-BSN...

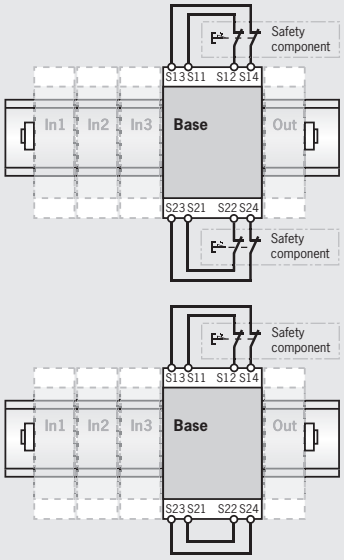

You can connect two dual-channel safety switches (e.g. two emergency stops) to the base unit. In the lower example only one safety switch has been connected, the unused safety inputs must therefore be connected together.

Safety inputs on the ESM-F-BMN...

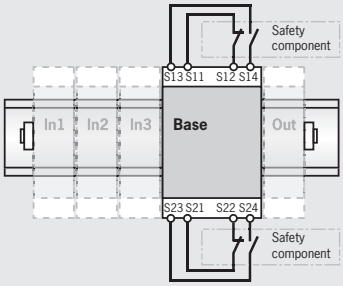

It is possible to connect two safety switches with one normally closed contact and one normally open contact (e.g. CMS from EUCHNER) to the base unit.

Safety contacts without feedback loop

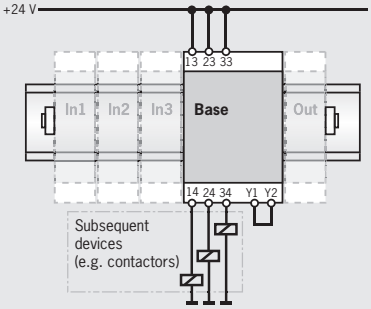

Safety contacts with feedback loop

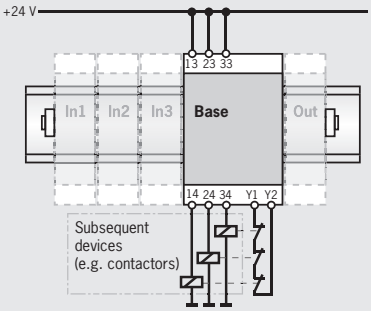

The base unit has three redundant, fault monitored safety contacts that shut down immediately if one of the safety circuits connected is interrupted or a fault occurs. To check the switching state on a connected load, the auxiliary contacts on a contactor or relay can be connected to terminals *Y1* and *Y2* to form a feedback loop. As supplied, the terminals *Y1* and *Y2* are connected together. The system can be expanded with further safety contacts using additional output modules. The function of the safety contacts and the feedback loop is the same as for the base unit.

Subject to technical modifications; no responsibility is accepted for the accuracy of this information.

Index by item designation

Item	Order No.	Page
ESM-2H201	085 620	11
ESM-2H202	098 345	11
ESM-BA201	085 610	9
ESM-BA202	085 611	9
ESM-BA203	085 612	9
ESM-BA301	085 613	9
ESM-BA302	087 412	9
ESM-BA303	087 413	9
ESM-BL201	085 607	8
ESM-BL202	085 608	8
ESM-BL203	085 609	8
ESM-BT401	090 818	10
ESM-BT411	090 819	10
ESM-BT421	090 820	10
ESM-ES301	085 614	12
ESM-ES302	085 615	12
ESM-ES303	085 616	12
ESM-F-AK4	097 194	20
ESM-F-BSN-2C2O2	095 120	16
ESM-F-I3I-3C2	095 916	17
ESM-F-ILI-3C2	097 577	17
ESM-F-IMI-3C2	095 123	17
ESM-F-ISI-2C2	095 122	17
ESM-F-ISI-6C1	095 123	17
ESM-F-KK4	097 195	20
ESM-F-OSN-O3M1	096 208	18
ESM-F-OSN-O4	095 125	18
ESM-F-OT05N-O4	095 917	19
ESM-F-OTN-O4	095 126	19
ESM-TE301	085 617	13
ESM-TE302	085 618	13
ESM-TE303	085 619	13

Index by order number

Order No.	Item	Page
085 607	ESM-BL201	8
085 608	ESM-BL202	8
085 609	ESM-BL203	8
085 610	ESM-BA201	9
085 611	ESM-BA202	9
085 612	ESM-BA203	9
085 613	ESM-BA301	9
085 614	ESM-ES301	12
085 615	ESM-ES302	12
085 616	ESM-ES303	12
085 617	ESM-TE301	13
085 618	ESM-TE302	13
085 619	ESM-TE303	13
085 620	ESM-2H201	11
087 412	ESM-BA302	9
087 413	ESM-BA303	9
090 818	ESM-BT401	10
090 819	ESM-BT411	10
090 820	ESM-BT421	10
095 120	ESM-F-BSN-2C2O2	16
095 122	ESM-F-ISI-2C2	17
095 123	ESM-F-ISI-6C1	17
095 124	ESM-F-IMI-3C2	17
095 125	ESM-F-OSN-O4	18
095 126	ESM-F-OTN-O4	19
095 916	ESM-F-I3I-3C2	17
096 208	ESM-F-OSN-O3M1	18
095 917	ESM-F-OT05N-O4	19
097 194	ESM-F-AK4	20
097 195	ESM-F-KK4	20
097 577	ESM-F-ILI-3C2	17
098 345	ESM-2H202	11

Automation

Position Switches
- Position Switches
- Position Switches according to EN 50 041

Precision Multiple Limit Switches

Inductive Limit Switches

Plug Connectors

Trip Rails/Trip Dogs

Inductive Ident Systems

Safety

Safety Switches, Metal Housing
- Safety Switches NZ/TZ
- Safety Switches NX/TX

Safety Switches, Plastic Housing
- Safety Switches NM
- Safety Switches NP/GP/TP
- Safety Switches STM
- Safety Switches STP

Non-Contact Safety Switches
- Non-Contact Safety Switches CES/CEM, Transponder Coding
- Non-Contact Safety Switches CMS, Magnetic Coding

Safety Products with integrated Bus Interface

Bolts for Safety Guards

Enabling Switches

Safety Relays
- Safety Relays ESM
- Modular Safety System ESM-F

Rope Pull Switches

ManMachine

Joystick Switches

Electronic Handwheels

Pendant Stations
- Pendant Stations HBA
- Pendant Stations HBE/HBL

Electronic-Key-System